1091773

Solid dispersions: Improving drug performance through tablet micro-structure design

Elke Prasad, John Robertson, Gavin W. Halbert

EPSRC Future Manufacturing Research Hub, University of Strathclyde, Technology and Innovation Centre, 99 George Street, Glasgow, G1 1RD, UK

CONTACT INFORMATION: elke.Prasad@strath.ac.uk

aaps PharmSci 360

PURPOSE

Solid dispersions formulations manufactured by Hot-Melt-Extrusion (HME) have shown to improve drug release for BCS class II drugs, such as Mefenamic acid (MFA). Drug release for MFA is highly dependent on particle size. Commercially available MFA capsules have shown high variability in their drug release profile which may lead to variable efficacy. This study shows how solid dispersion formulations and microstructure design significantly improve product performance.

OBJECTIVE(S)

To improve product performance and consistency through solid dispersion formulation and tablet micro-structure design.

METHODS

Solid dispersion formulation of 50% w/w Mefenamic acid (MFA, Sigma Aldrich) and Soluplus (BASF) containing 15% w/w Sorbitol (Merck) as plasticiser (SOL15) was prepared by HME (Process 11, Thermofisher). The formulation was a) pelletised and hand filled into size 0 hard gelatine capsules [1] and b) 3D printed (3DP) with a porous core exposed to the surface (Figure 1) to achieve a MFA dose of 250mg. Neat **MFA powder** and a **physical mixture (PM)** of 50% (w/w) MFA and SOL15 powder were also hand filled into size 0 hard gelatine capsules to generate a MFA dose of 250mg.

Pellets were prepared by cutting the HME filament (~2 mm diameter) to the length of approximately ~2mm [1]. **3DP tablets** were printed with a novel in-house designed integrated HME-3D printer (Intellectual Property Office UK, patent application number 2101534.2). The 3D printed tablet shape was elliptical with a length of 22 mm, width of 12 mm and height of 5mm. The Infill % was set to 47.3%, which equated to an infill line distance of 0.85 mm (gap between infill lines). No top or bottom layer were printed to create a porous tablet core.

Drug release profiles of all pellets, 3DP tablets and powders were established by performing a Dissolution test based on USP 37 Mefenamic acid capsules (n=6) in Tris buffer pH 9 and HPLC (UV) analysis. The % drug release (normalised to tablet weight / capsule fill weight) was calculated and reported.

RESULTS

3DP tablets:

- printed in sets of 6 with a uniformity of mass < 1.7 % (in agreement with EuPh requirements) (Table 1, Figure 1)
- dimensional accuracy was good with maximum % RSD of 0.73% (Table 1)

API Content:

- The API content was very uniform with 48.3% ± 0.2% (w/w).

Drug release

- Whilst MFA powder achieved a very consistent released, it failed to release >85 % content within 60 minutes (Figure 2A).
- The physical mixture showed greater variation between the 6 capsules, but released >85% content at 55 minutes.
- The pelletised solid dispersion formulation significantly improved drug release compared to neat MFA powder and the PM, >85% drug released within 35 minutes [1] and therefore complying with pharmacopeial release requirements (>85% at 45 minutes) (Figure 2B). The variation between individual tablets was also lower compared to the PM.
- The **3DP tablet**, with a highly controlled microstructure, achieved **complete drug release** at **20 minutes** (91.6%). The variation in drug release was only high at 10 minutes and very low at all other data points (Figure 2B).
- The inner core of 3DP tablets dissolved within 10 minutes (Figure 3). Most of the tablet shell dissolved within 20 minutes.

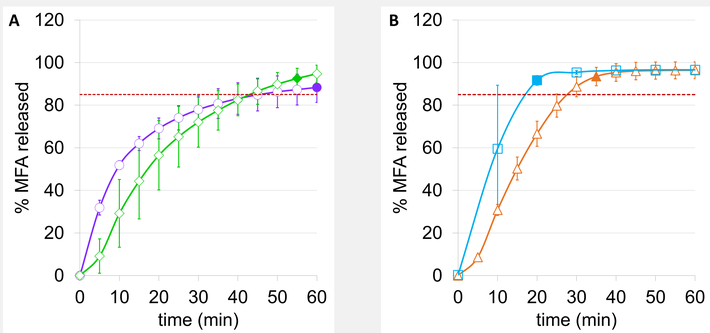

*Figure 2: % drug release over time for A) MFA powder – purple, open circle; Physical mixture of 50% w/w MFA and SOL15 – green, open diamond and B) pelletised extrudate of 50% w/w MFA and SOL15 – orange, open triangle and 3D printed tablet of 50% w/w MFA and SOL15 – blue, open square. **Filled** marker **>85%** MFA released. Red dashed line – 85% MFA released (n=6).*

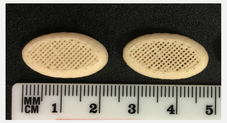

Figure 1: 3D printed tablet with porous core: elliptical shape with dimensions of 22 mm length, 12 mm width and 5 mm height. Infill percentage 47.3%. No top or bottom layer were printed.

Tablet	Length (mm)	Width (mm)	Height (mm)
Average	21.69	11.78	4.78
Std dev	0.16	0.02	0.02
% RSD	0.73	0.13	0.49

Table 2: Dimensions of 3D printed tablets with porous core: elliptical shape with design dimensions of 22 mm length, 12 mm width and 5 mm height.(Std dev – standard deviation, %RSD - % relative standard deviation.

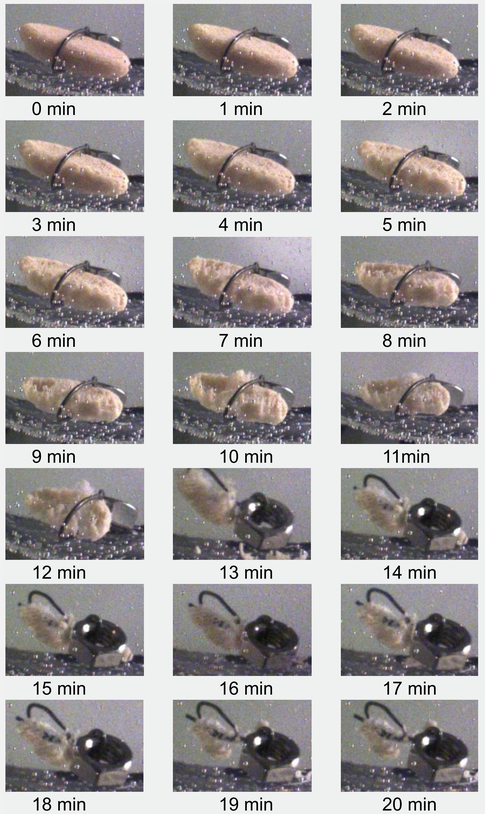

Figure 3: Tablet dissolution in Tris buffer pH 9 (USP 37): 0 – 20 minutes.

CONCLUSIONS

Solid dispersion formulation significantly improved the drug release profile by increasing the consistency and reducing the time to achieve complete drug release (>85%) to 35 minutes and 20 minutes for the 3DP tablet.

This study demonstrates the possibility of fine tuning drug release profiles through micro-structure control by 3DP.

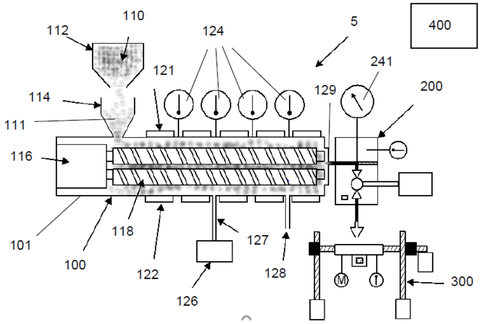

Figure 4: Schematic of novel in-house designed integrated HME-3D printer (Intellectual Property Office UK, patent application number 2101534.2). .

ACKNOWLEDGEMENTS / FUNDING

The authors would like to acknowledge that this work was carried out in the CMAC National Facility supported by the EPSRC (Grant ref EP/P006965/1) and by UKRPIF (UK Research Partnership Fund) award from the Higher Education Funding Council for England (HEFCE) (Grant ref HH13054). G. W. Halbert is funded by Cancer Research UK (C149/A20496). We would like to thank the National Facility team for their support in this project. We would also like to thank BASF for the donation of Soluplus® polymer.

REFERENCE

[1] Prasad E, Robertson J, Halbert GW 2020. Improving consistency for a Mefenamic acid immediate release formulation. J Pharm Sci 109(11):3462-3470.

CMAC FUTURE MANUFACTURING RESEARCH HUB