FSI simulation of a composite wind turbine blade

ZhongSheng Deng[1], Qing Xiao[2], Liu Yang[3]

[1,2] Naval Architecture, Ocean and Marine Engineering, University of Strathclyde, Glasgow
(zhongsheng.deng@strath.ac.uk)
[3] Mechanical & Aerospace Engineering, University of Strathclyde, Glasgow

University of Strathclyde Engineering

The wind turbine blades are exposed under complex time-variant aero-dynamic loads, besides, due the complexity of its aero-dynamic shape, the study on blade dynamic responses can be sophisticated.

To achieve a more realistic simulation and with credible results, a FSI analysis is necessary for resolving the coupling effects between the blade structure and the surrounding flow, and thus examine the load impacts to the blade structure itself by having e.g. stress distribution and strain. A typical structural layout of a composite blade is shown in Fig 4(a). From the cut-plane view, the blade is composed by 6 sections on the chord-line direction, supported by 2 bearing structures between the up and down blade surfaces.

For each sections, materials with different mechanical properties and stacking orders are applied. This will lead to a sophisticated modeling process.

Firstly, a validation of fluid flow pass a 3D cylinder is accomplished in ANSYS Fluent, where the cell-centered finite volume method is used for the spatial discretization. The discretizing transport equation in ANSYS Fluent can be described as:

$$\int_V \frac{\partial \rho \phi}{\partial t} dV + \int_S \rho \phi \vec{v} \cdot dA = \int_S \Gamma_\phi \nabla \phi \cdot dA + \int_V S_\phi \, dV$$

Where V is the cell volume, Γ_ϕ denotes the diffusion coefficient for ϕ, S_ϕ is the source of ϕ per unit volume. The transient time discretizing scheme is the first order implicit, which enables a more stable solution of a discretized system. In order to maintain the accuracy of the interpolations between cell volumes, the second order upwind scheme is implemented for the convection terms.

In this validation case, the aspect ratio (L/D) of the 3D cylinder is 3.14, The Reynolds number of the validation case is 300. Fig 1 shows a modulated patterned vortex shedding depicted by Q-criterion which is totally 3D. Through this validation, it provides plenty of experience for the CFD validation of the blade FSI simulation in next stage of research.

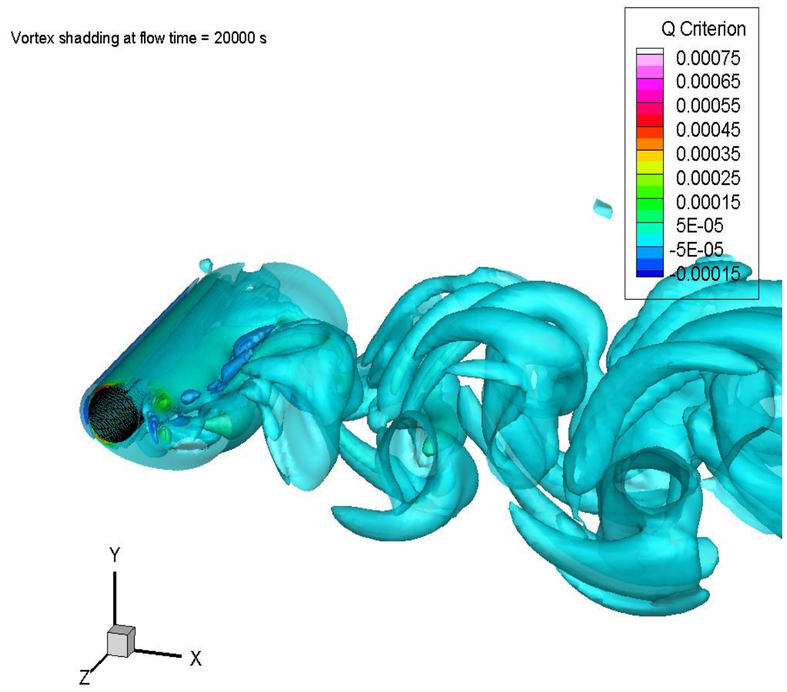

Fig 1. vortex shedding at non-dimensional = 20000s in 3D

Schematic diagrams of the NREL 5MW wind turbine finite element composite blade model are shown in Fig 2 and 3. The chosen composite material mechanical properties, the material layering and stacking schemes for a NREL 5WM blade are collected from (Miao et al., 2019).

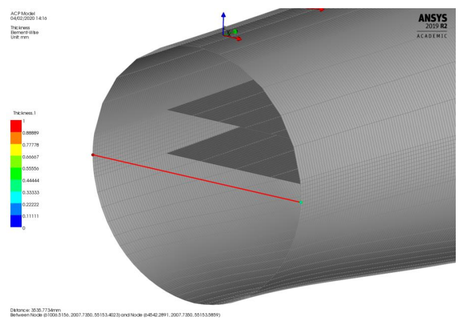

Fig 2. overview of the FEM at the blade root area

Miao, W., et al. (2019). "*Study of adaptive blades in extreme environment using fluid–Structure interaction method.*" Journal of Fluids and Structures **91**: 102734.

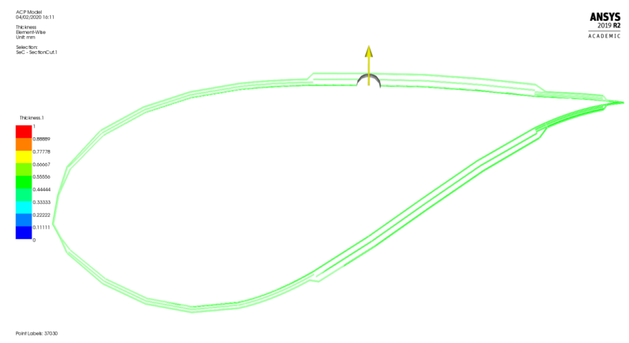

Fig 3. illustration of the composite modeling

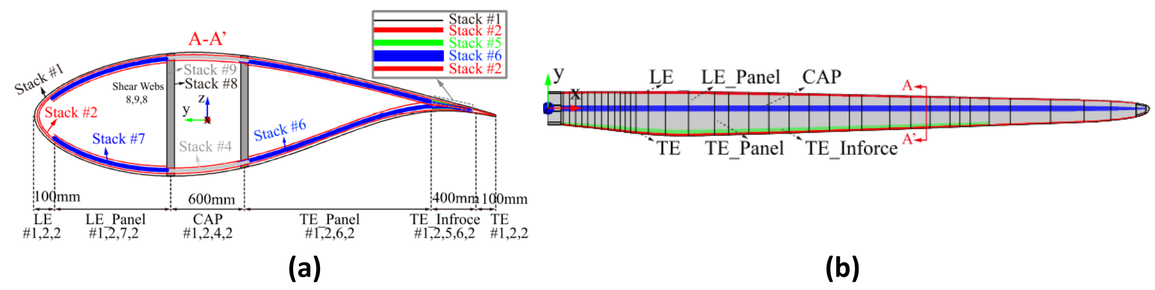

(a) (b)

Fig 4. (a) cut-plane view of a composite blade on chord-wise direction. (b) blade sections overview on span-wise direction. (Miao et al. 2019)

For the coupling method, a multi-physics data coupling platform preCICE (Bungartz, Lindner et al. 2016) will be selected for this research, with the Radial Basis Function (RBF) data mapping scheme implemented for maintaining an adequate accuracy of the interpolation of data as well as shortening the computational time of the coupling process. The coupling environment of preCICE is shown in Fig 5.

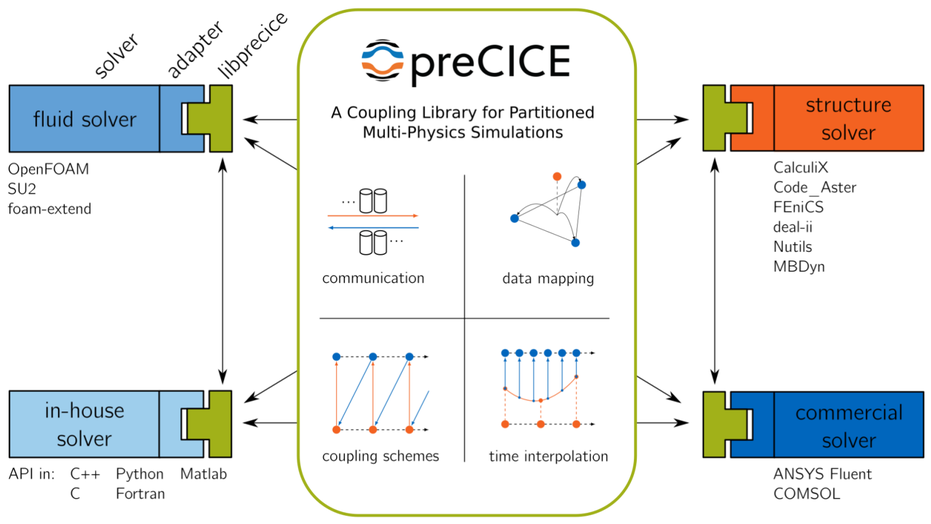

Fig 5. available solvers and codes coupled by preCICE (Source: www.precice.org)

As the research continues, the expected outcomes for the next stage work is to build 2 cases for validating the fluid flow around a stationary blade and the static structural response of the blade composite structures.

A fully functional coupling environment for the composite blade FSI simulation will also be established, the comparing work for the results with those from the acquired publications is planned, by quantifying the results e.g. the Lift / Drag coefficients in fluid domain, and the stress / strain distributions in structure domain.

Bungartz, H.-J., et al. (2016). "*preCICE – A fully parallel library for multi-physics surface coupling.*" Computers & Fluids 141: 250-258.

Source: www.precice.org

ARCHIE-WeSt

Results were obtained using ARCHIE-WeSt High Performance Computer (www.archie-west.ac.uk).