SDRE Preview Control for a LPV Modelled Autonomous Vehicle ⋆

Cagatay Cebeci, **Michael Grimble**, **Luis Recalde-Camacho**, **Reza Katebi**

Department of Electronics and Electrical Engineering, University of Strathclyde, Glasgow, G11XW, UK, (e-mail: cagatay.cebeci@strath.ac.uk).

Abstract: This paper aims to present a Preview Controller by taking State-Dependent Riccati Equation (SDRE) approach to the standard Preview Control solution based on Linear Quadratic (LQ) framework. A Matlab/Simulink simulation study for performing a lane change task for a LPV modelled autonomous vehicle has been conducted. The control objective is to achieve reference tracking under parameter variation. It is assumed that the system has access to the future reference information for N_p preview steps. The results show that the SDRE Preview Controller demonstrates good transient behaviour and achieve reference tracking objective.

Keywords: Autonomous vehicles, LQR, SDRE, Preview control, Lane change, Lateral dynamics.

1. INTRODUCTION

Preview control method uses the knowledge of future reference or future disturbance signals to calculate optimal control signals without demanding predictions of future control inputs. The first examples of the method were proposed over five decades ago (Sheridan, 1966; Bender, 1968) and it has been attracting an increasing interest from researchers since the late 2000s. A significant amount of research done on preview control has its roots in the early work of Tomizuka who introduced the use of LQ type cost functions for the solution of optimal preview tracking problems (Tomizuka & Whitney , 1975). There have been different efforts for deriving solutions as well. For example, Takaba (2003) uses H_∞ formulation, Uzunsoy & Erkilinc (2016) develops a fuzzy preview controller and Negm et al. (2003) applies artificial neural networks for their solutions.

It is observed that a large portion of preview control applications appear in automotive industry concentrating on suspension systems with intentions to improve passenger comfort, security (e.g., vehicle rollover prevention, braking) by rejecting the disturbances or autonomous vehicle steering/guidance with regards to reference signal tracking in order to tackle the problems of trajectory following, lane keeping/changing etc. Toyota and Nissan have studies for path tracking and active suspension systems with preview control respectively (Boyali et al., 2017; Tobata et al., 1993). There are also some examples of preview control based on providing aid to the driver that could be classified under advanced driver assistance systems (Saleh et al., 2013). However, it should be noted that application areas are not limited to the automotive research. Studies of preview control have been made to address questions in various different areas including robotic manipulator trajectory following, wind turbine control in cases where wind profile can be estimated or humanoid robot walking pattern generation problems (Kajita et al., 2003; Stotsky & Egardt , 2012; Negm & Kheireldin , 1991). A comprehensive literature survey that covers the topic's development is available (Birla & Swarup , 2014).

Although, several methods and applications are present, preview control is a field which is still under development. It is needing more generalized control solutions and tools for analysis that could be applied to a wide range of applications. However, there is a noteworthy example called the Preview Control Toolbox developed by Hazell (2018). They have proposed a H_2/H_∞ solution based theoretical framework which incorporates an efficient method for solving the computationally expensive discrete-time algebraic Riccati equations (Hazell , 2008). Their results are mainly for linear time-invariant systems as is the case for the majority of preview controllers in the literature. There are only a limited number of studies available on the design of preview controllers with LPV modelling approach such as the work of Boyali et al. (2017) who introduces robust gain scheduling preview controllers using H_∞ solutions and Linear Matrix Inequalities. To authors' knowledge, it is the only example that considers the LPV modelling approach for preview control of vehicle steering problems. Motivated from these results, the SDRE technique has been considered for the preview controller in this paper. The intuition is that the traditional preview controller can be designed in a straightforward manner for LPV systems.

SDRE approach (Cloutier , 1997) is a technique for the control of non-linear dynamic systems which are represented in linear structures. The optimal control solution procedure is made roughly in a similar fashion to those of LQ type algorithms. The method has seen success in a number of applications as the flexible-link manipulator

⋆ The author Cagatay Cebeci would like to express his gratitude to the Turkish Ministry of National Education for the sponsorship of his studies.

in Shawky et al. (2013). According to a survey made for the SDRE technique (Cimen , 2008), it is indeed clear that the number of successful applications have already outmatched the number of theoretical results.

The outline of this paper is as follows: Section II represents the vehicle model based on the lateral vehicle dynamics, Section III demonstrates the SDRE preview controller results for the lane change problem in order to discuss its response to the parameter variations. In the last section, conclusions from the study have been made and topics of interest for future work are expressed.

2. LPV AUTONOMOUS VEHICLE MODEL

The control objective is to perform a lane change manoeuvre for an autonomous car which means that lateral vehicle dynamics need to be taken into account when designing the system model and controllers. When constructing the model, left and right wheels for both front and rear axles are lumped into a single wheel thus transforming from four wheels to two wheels bicycle model as in Fig. 1,

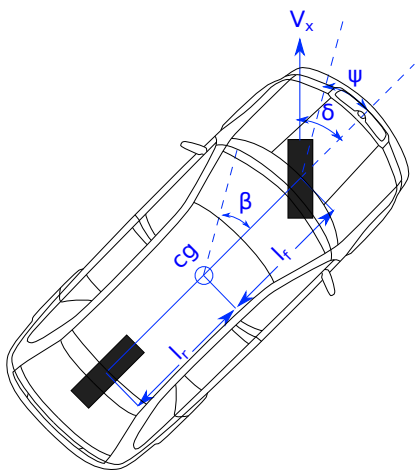

Fig. 1. Bicycle model.

where V_x denotes the longitudinal velocity, ψ is the yaw angle, δ is the steering angle which acts as the control input signal, β is called the side slip angle and the distances from the vehicle center of gravity cg to the rear and front tires are l_r and l_f respectively. Detailed derivations of both mathematical and state-space models are available in Rajamani (2012). The state-space representation of the LPV autonomous vehicle model may be summarized as,

$$\begin{aligned} \dot{x}(t) &= A_t x(t) + B_t \delta(t), \\ z(t) &= C_t x(t). \end{aligned} \tag{1}$$

LPV, q-LPV or state-dependent system matrices are functions of states, inputs and parameters. Let us clarify that the expression $A_t = A(x(t); u(t-k); \rho(t))$ (in similar fashion B_t, C_t) is used simply to avoid notational complexity. The state vector in the model is expressed by $x(t) = \big(y(t)\ \dot{y}(t)\ \psi(t)\ \dot{\psi}(t)\big)'$ which consists of lateral position $y(t)$, yaw angle $\psi(t)$ and their rates. The state matrices A_t and B_t are defined by,

$$A_t = \begin{pmatrix} -\dfrac{(2C_f + 2C_r)}{mV_x(t)} & 0 & -V_x(t) - \dfrac{(2C_f l_f - 2C_r l_r)}{mV_x(t)} & 0 \\ 0 & 0 & 1 & 0 \\ -\dfrac{(2C_f l_f - 2C_r l_r)}{I_z V_x(t)} & 0 & -\dfrac{(2C_f l_f^2 + 2C_r l_r^2)}{I_z V_x(t)} & 0 \\ 1 & V_x(t) & 0 & 0 \end{pmatrix},$$

$$B_t = (2C_f/m\ \ 0\ \ 2C_f l_f/I_z\ \ 0)',$$

with varying parameter $\rho = V_x(t)$ and $\delta(t)$ as control input. The output vector $z(t)$ and the corresponding state matrix C_t of the model are as shown below.

$$z(t) = \begin{pmatrix} y(t) \\ \psi(t) \end{pmatrix}, C_t = \begin{pmatrix} 1 & 0 & 0 & 0 \\ 0 & 0 & 1 & 0 \end{pmatrix}$$

The parameters C_f and C_r are the cornering stiffness of the front and rear tires respectively, I_z is yaw moment of inertia and lastly m stands for the vehicle mass. In order to track the reference lateral position and yaw angle, the controller tries to minimize the lateral position error $e_1(t)$, $\dot{e_1}(t) = V_y(t) + V_x(t)e_2(t)$, and yaw angle error $e_2(t) = \psi(t) - \psi_{des}(t)$ where ψ_{des} is the desired yaw angle which is obtained by $\dot{\psi}_{des}(t) = V_x/R$. The curvature of the road is given by $1/R$ with R being the radius. The new state vector $x_e(t)$ is denoted as in $x_e(t) = (e_1(t)\ \dot{e_1}(t)\ e_2(t)\ \dot{e_2}(t))'$. The state-space matrices can then be derived accordingly to represent the error dynamics,

$$\dot{x_e}(t) = A_{et} x_e(t) + B_{et}\delta(t) + \overline{B}_{et}\dot{\psi}_{des}(t), \tag{2}$$

where,

$$A_{et} = \begin{pmatrix} 0 & 1 & 0 & 0 \\ 0 & -\dfrac{(2C_f + 2C_r)}{mV_x(t)} & \dfrac{(2C_f + 2C_r)}{m} & \dfrac{(-2C_f l_f + 2C_r l_r)}{mV_x(t)} \\ 0 & 0 & 0 & 1 \\ 0 & -\dfrac{(2C_f l_f - 2C_r l_r)}{I_z V_x(t)} & \dfrac{(2C_f l_f - 2C_r l_r)}{I_z} & -\dfrac{(2C_f l_f^2 + 2C_r l_r^2)}{I_z V_x(t)} \end{pmatrix},$$

$$\overline{B}_{et} = \left(0\ \ -V_x(t) - \frac{(2C_f l_f - 2C_r l_r)}{mV_x(t)}\ \ 0\ \ -\frac{(2C_f l_f^2 + 2C_r l_r^2)}{I_z V_x(t)}\right)'.$$

and $B_{et} = B_t$. Note that, if the longitudinal velocity V_x is a constant, the LPV model becomes an LTI model.

The changes in the plant dynamics due to the varying longitudinal velocity may prove quite a challenge for controllers. It is expected that the SDRE preview controller will exhibit some sense of an adaptive behaviour considering that the SDRE algorithm uses optimized feedback gains which are updated in response to the changes in the system dynamics. Therefore, the controller can be a suitable candidate for preview control of LPV systems.

Let us further indicate that the models in (1) and (2) are in continuous-time and thus needs to be converted to a discrete-time model for the implementation of the controllers used in this study. It can be acquired using forward Euler approximation as in $A_{dt} = (1 - T_s A_t)$, $B_{dt} = T_s B_t$ and $C_{dt} = C_t$ with T_s being the sample time.

In order to benefit from the future reference information, a state-space model that contains the road states that will be previewed for Np steps should be constructed. This is often referred to as the road model and can be represented as below,

$$y_r(t+1) = A_r y_r(t) + B_r y_{rN_p}(t), \tag{3}$$

where $y_r(t)$ is the $N_p \times 1$ road state vector and y_{rN_p} is the scalar input vector. The system matrices are expanded as in,

$$A_r = \begin{pmatrix} 0 & 1 & 0 & \dots & 0 \\ 0 & 0 & 1 & \dots & 0 \\ \vdots & \vdots & \vdots & \ddots & \vdots \\ 0 & 0 & 0 & \dots & 1 \\ 0 & 0 & 0 & \dots & 0 \end{pmatrix}, B_r = \begin{pmatrix} 0 \\ 0 \\ 0 \\ \vdots \\ 1 \end{pmatrix}$$

The previewed reference information is incorporated into the system by combining the road model with the vehicle plant model in the final augmented state-space model,

$$\begin{pmatrix} x_e(t+1) \\ y_r(t+1) \end{pmatrix} = \begin{pmatrix} A_{et} & 0 \\ 0 & A_r \end{pmatrix} \begin{pmatrix} x_e(t) \\ y_r(t) \end{pmatrix} + \begin{pmatrix} B_{et} \\ 0 \end{pmatrix} \delta(t) + \begin{pmatrix} 0 \\ B_r \end{pmatrix} y_{rN_p}(t),$$

$$= \mathcal{A}\mathcal{X}(t) + \mathcal{B}_e \delta(t) + \mathcal{B}_r y_{rN_p}(t), \tag{4}$$

and the output equation is constructed using the new measurements matrix $\mathcal{C}$,

$$\mathcal{Z}(t+1) = \mathcal{C}\mathcal{X}(t) = \begin{pmatrix} 1 & 0 & 0 & 0 & -1 & 0 & 0 & \dots & 0 \\ 0 & 0 & 1 & 0 & \frac{1}{V_x T} & \frac{-1}{V_x T} & 0 & \dots & 0 \end{pmatrix} \mathcal{X}(t).$$

which will be used in the SDRE cost function. The modelling principles are adapted from the work of Sharp & Valtetsiotis (2001) on optimal LQR preview control.

3. LANE CHANGE PROBLEM

The lane change task will be approached as a reference tracking problem and appropriate lateral vehicle control strategies will be utilized for its' success. The first part of this section briefly introduces a visual model of the reference signal and discusses how it is generated. The second part presents a summary of the SDRE preview control algorithm. In the last subsection, the results of the controller action is demonstrated from the adaptation point of view.

3.1 Reference Trajectory Generation

There are several ways to create a reference path such as using straight line segments joined in a sequential fashion or clothoids depending on the lateral vehicle control task. The approach taken in this work is to generate a series of waypoints that are closely spaced by using Matlab's Driving Scenario toolbox and linspace functions. The toolbox enables the visualization of the desired lane change manoeuvre as shown in Fig. 2.

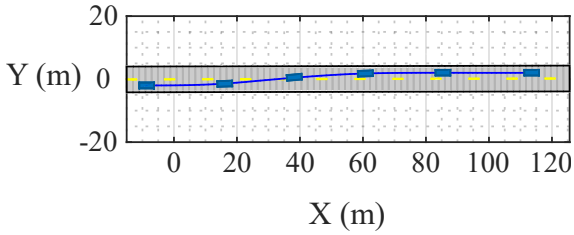

Fig. 2. Lane Changing Manoeuvre.

A lane changing task in practical might involve even more complex manoeuvres when traffic flow, merging, exits and etc. are considered. In fact, traffic collisions related to the lane changing constitute to a significant amount of total crashes including fatal ones (NHTSA, 2009). Risk factors can be expected to further increase with the introduction of self-driving cars. Thus, proper control strategies can help reduce the number of crashes and increase traffic safety. The topic has already been attracting the attention of autonomous driving researchers (Falcone et al., 2007; Kang et al., 2016) and is gaining popularity.

A crucial element from the vehicle control point of view is to handle the varying parameters properly. In realistic scenarios for instance, the longitudinal velocity during lane changing might vary depending on different factors mentioned above. The simulation studies in this paper will address the problem as well as the tracking of the reference trajectories.

3.2 SDRE Preview Control

The LQR preview controller (Sharp & Valtetsiotis , 2001) is extracted from the solutions of the cost function below,

$$J(\mathcal{X}(t), \delta(t)) = \lim_{N_p \to \infty} \sum_{t=0}^{N_p} \left(\mathcal{X}(t)^T \mathcal{Q} \mathcal{X}(t) + \delta^T(t) R \delta(t) \right) dt,$$

for the augmented state-space model in (4) where $\mathcal{Q} = \mathcal{C}^T Q \mathcal{C}$ and V_x is constant. The control law is given by,

$$\delta(t) = -K\mathcal{X}(t) = (R + B^T P B)^{-1} B^T P A \mathcal{X}(t),$$

where P satisfies the Riccati Equation,

$$P = A^T P A + A^T P B (R + B^T P B)^{-1} B^T P A + Q.$$

This paper aims to extend the scheme to LPV systems by considering the SDRE approach.

In summary, the SDRE technique is an extension of the LQ problem to provide suboptimal solutions for non-linear control problems. The standard design steps start with re-arranging the LQR cost function as in,

$$J(x,u) = \frac{1}{2}\int_{t_0}^{\infty} \big(x^T Q(x)x + u^T R(x)u\big)dt,$$

where weight matrices $Q(x)$ and $R(x)$ can be chosen as functions of states. The non-linear system representation,

$$\dot{x} = f(x) + g(x)u,$$

can be expressed in a linear structure using State-Dependent Coefficient (SDC) form,

$$\dot{x} = A(x)x + B(x)u.$$

Then the SDRE equation is formulated,

$$A^T(x)P + PA(x) - PB(x)R^{-1}(x)B^T(x)P + Q(x) = 0.$$

which is solved for $P(x) \geq 0$. Finally, the control signal is calculated,

$$u = R^{-1}(x)B^T(x)P(x)x.$$

The SDRE design procedure is illustrated by the flowchart in Fig.3 below,

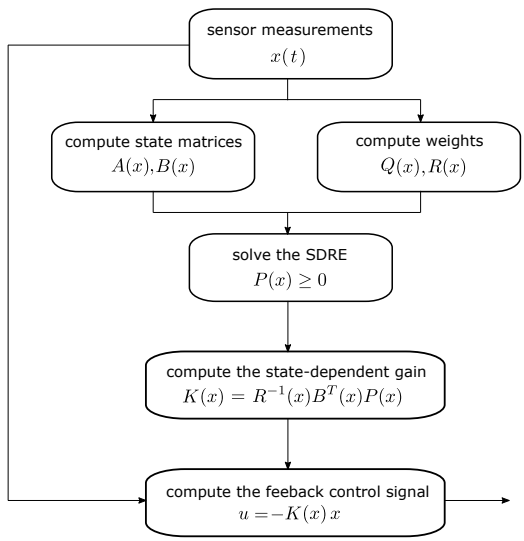

Fig. 3. SDRE flowchart.

in which sensor measurements transfer the system information for computation of the state matrices and the cost function weights, if they are chosen to be state-dependent, then the SDRE equation is solved for $P(x) \geq 0$ and finally the feedback control signal is calculated and delivered to the plant. This sums up the background control theory for the approach taken in this work.

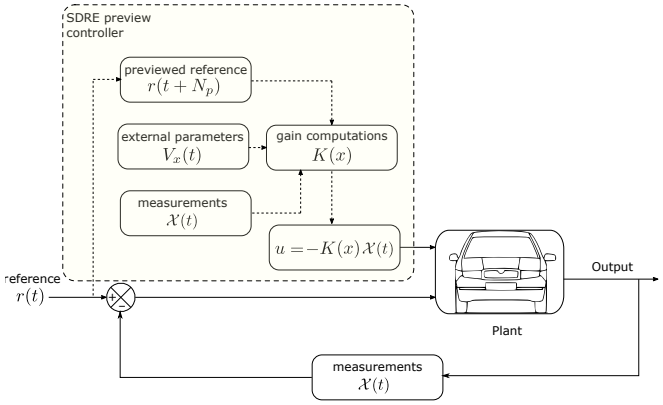

Fig. 4. SDRE preview control.

The SDRE technique will be embodied within the preview control diagram as shown in Fig.4. Recall that the controller is digital therefore the discretized version of the SDRE formulation is used in actual computations. The preview control cost function given earlier is organized as,

$$J(\mathcal{X}(t), \delta(t)) = \lim_{N_p \to \infty} \sum_{t=0}^{N_p} \big(\mathcal{X}(t)^T \mathcal{Q}(x)\mathcal{X}(t) + \delta^T(t)R(x)\delta(t)\big)dt,$$

for the augmented state-space model in (4) considering the parameter variation now where $\mathcal{Q}(x) = \mathcal{C}(x)^T Q(x)\mathcal{C}(x)$. The SDRE preview control law is hence given by,

$$\begin{aligned}\delta(t) &= -K(x)\mathcal{X}(t)\\ &= (R(x) + B^T(x)P(x)B(x))^{-1}B^T(x)P(x)A(x)\mathcal{X}(t),\end{aligned}$$

where $P(x)$ satisfies the discrete SDRE Equation,

$$\begin{aligned}P(x) =& A^T(x)P(x)A(x) + A^T(x)P(x)B(x)(R(x)+\\ & B^T(x)P(x)B(x))^{-1}B^T(x)P(x)A(x) + Q(x).\end{aligned}$$

Let us add that the control signal gain $K(x)$, actually consists of state feedback and preview gains. It can be formulated by $K(x) = \big(K_{fb}(x), K_{ff}(x)\big)$.

For simulations, the weights $Q(x)$ and $R(x)$ are chosen as,

$$Q(x) = \begin{pmatrix} 1 & 0 \\ 0 & 0 \end{pmatrix}, R(x) = 1.$$

The vehicle parameters are selected as vehicle mass $m = 1573kg$, yaw moment of inertia $I_z = 2550mNs^2$, front and rear tires' cornering stiffness values $C_f = 2 * 88310N/rad$, $C_r = 2 * 64076N/rad$, respectively. Sampling time $T_s = 0.02$ and the preview steps have been chosen $N_p = 250$ by trial and error procedure. It is known that there exists a maximum preview length beyond which there is not

room for further improvements. However, an algorithm that can determine the optimal preview length has not been presented in the literature yet.

Below are the simulation results demonstrating the vehicle lane changing manoeuvre. As the reference signal indicates, a single lane change action is taking place. In Fig.5, the longitudinal velocity is kept constant at $V_x(t) = 20m/s$. Both controllers are tracking the reference successfully with the SDRE preview control showing a faster transient response exploiting the future reference information.

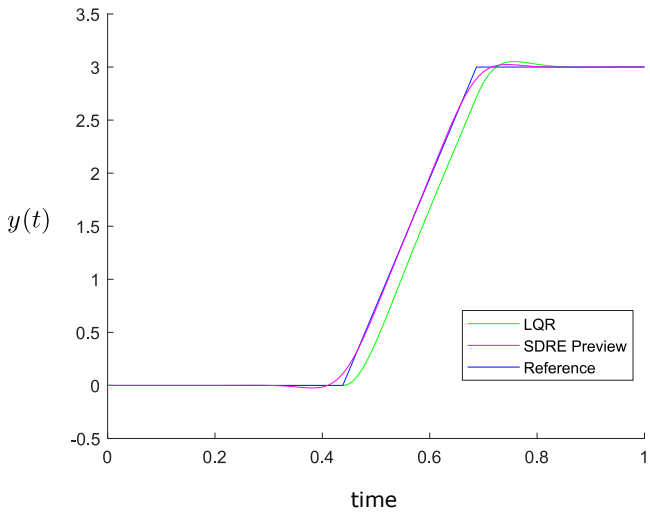

Fig. 5. SDRE preview controller vs LQR at $V_x(t) = 20m/s$.

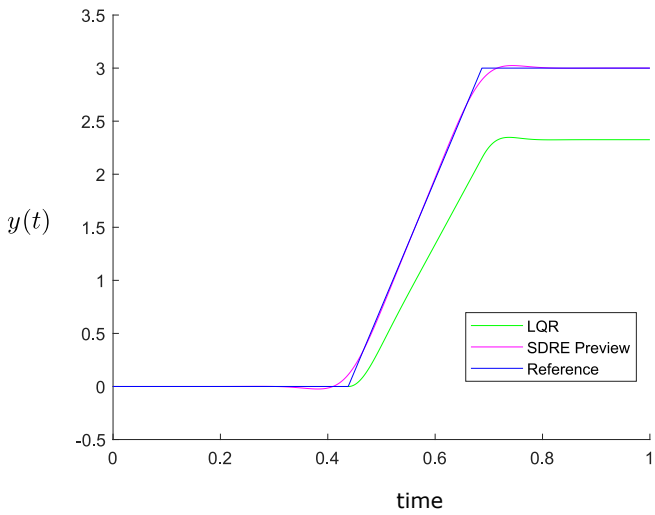

Fig. 6. SDRE preview controller vs LQR as $V_x(t)$ varying.

In Fig.6, longitudinal velocity $V_x(t)$ increases with a $2m/s^2$ acceleration rate with the initial value of $20m/s$ for 10 simulation seconds (the simulation time is scaled in the graphs.)

Under parameter variation, LQR shows noticeable tracking errors whereas SDRE preview controller keeps up with the objective. The LQR needs retuning in order to accommodate the changes each time whereas the SDRE preview controller does not because its gains are updated.

For instance, initial calculation of the state feedback portion is recorded below,

$$K_{fb}(0) \approx (0.3095,\ 0.076,\ 4.602,\ 0.4120)\,,$$

which is continuously updated during the simulations in response to the parameter variations and reaches its final values ($V_x(t) = 40m/s$),

$$K_{fb}(\infty) \approx (0.3056,\ 0.1128,\ 4.4504,\ 0.6497)\,,$$

showing that the controller is adapting to the changes in the system.

4. CONCLUSION

The SDRE preview controller has shown potential at adapting to parameter variations. Its a straight-forward extension of the classical preview control with a simple design procedure. The controller can also be used for quasi-LPV models. Future work may consider such implementation as well as the investigation of set point change and disturbance cases or handling of the constraints.

ACKNOWLEDGEMENTS

The authors would like to thank Dr. Pawel Majecki and Dr. Luca Cavanini of the ISC Ltd. for theoretical discussions and software support.

REFERENCES

T.B. Sheridan (1966). Three Models of Preview Control. *IEEE Transactions on Human Factors in Electronics.*

E.K. Bender (1968). Optimum Linear Preview Control With Application to Vehicle Suspension. *ASME J. Basic Eng.*, volume 90, issue 2, pages 213–221.

N. Birla and A. Swarup (2014). Optimal preview control: A review. *Optimal Control Applications and Methods.*

L. Saleh, P. Chevrel, F. Claveau, JF. Lafay, and F. Mars (2013). Shared steering control between a driver and Automation Stability in the Presence of Driver Behavior Uncertainty *IEEE Transactions on Intelligent Transportation Systems*, vol 14, no 2.

Rajesh Rajamani (2012). Vehicle Dynamics and Control. Springer, New York, 2nd edition.

K. Takaba (2003). A tutorial on preview control systems. *Proceedings of the SICE Annual Conference*, pages 1388–1393, Japan.

A. Boyali, V. John, Z. Lyu, R. Swarn and S. Mita (2017). Self-Scheduling Robust Preview Controllers for Path Tracking and Autonomous Vehicles. *Asian Control Conference*.

A.W. Ordys, M. Tomizuka and M.J. Grimble (2007). State-space Dynamic Performance Preview Predictive Controller. *Journal of Dynamic Systems Measurement and Control - Transactions of the ASME*. vol 129, issue 2, pages 144–153.

D. J. Cole, A. J. Pick and A. M. C. Odhams (2006). Predictive and linear quadratic methods for potential application to modelling driver steering control. *Vehicle System Dynamics*, vol 44, no 3, pages 259–284.

National Highway Traffic Safety Administration (2009). Analysis of Lane-Change Crashes and Near-Crashes. `nhtsa.gov/sites/nhtsa.dot.gov/files/811147.pdf`

P. Falcone, F. Borrelli, J. Asgari, H. E. Tseng, and D. Hrovat (2007). Predictive Active Steering Control for Autonomous Vehicle Systems. *IEEE Transactions on Control Systems Technology*, vol 15, no 3.

C. M. Kang, Y. S. Gu, S. J. Jeon, Y.S. Son, W. Kim, S.H. Lee and C.C. Chung (2016). Lateral Control System for Autonomous Lane Change System on Highways. *SAE Int. J. Passeng. Cars - Mech. Syst.*, vol 9, issue 2, pages 877–884.

M. Tomizuka and D.E. Whitney (1975). Optimal Discrete Finite Preview Problems: Why and How Is Future Information Important? *ASME J. Dyn. Syst., Meas., Control*, pages 319–325.

E. Uzunsoy and V. Erkilinc (2016). Development of a trajectory following vehicle control model. *Advances in Mechanical Engineering*, vol 8, issue 5, pages 1–11.

MM Negm, AH Mantawy, MH Shwehdi (2003). A global ANN algorithm for induction motor based on optimal preview control theory. *Proceedings of IEEE Bologna Power Tech Conference*, pages 1–7.

A. J. Hazell (2008). Discrete-Time Optimal Preview Control. Ph.D. thesis, Imperial College, London.

A. J. Hazell (2018). Preview Control Toolbox (2018). `https://github.com/ajhazell/preview_control_toolbox`.

H. Tobata, K. Fukuyama, T. Kimura and N. Fukushima (1993). Advanced Control Methods of Active Suspension *Vehicle System Dynamics*, vol 22, pages 347–358.

S. Kajita, F. Kanehiro, K. Kaneko, K. Fujiwara, K. Harada, K. Yokoi and H. Hirukawa (2003). Biped Walking Pattern Generation by using Preview Control of Zero-Moment Point. *Proceedings of the IEEE International Conference on Robotics & Automation*, Taipei, Taiwan.

A. Stotsky and B. Egardt (2012). Model-based control of wind turbines: look-ahead approach. *Proc IMechE Part I: J. Systems and Control Engineering*, pages 1029–1038.

MMM. Negm, AF. Kheireldin (1991). Properties of adaptive, optimal and preview controllers based on MVC and LQS optimal controller application to robotic manipulator. *Proceedings of the International Conference on Control*, pages 323–328.

A. Shawky, D. Zydek, Y. Z. Elhalwagy, A. Ordys. Modeling and nonlinear control of a flexible-link manipulator. *Applied Mathematical Modelling*, vol 37, pages 9591–9602.

T. Cimen (2008). State-Dependent Riccati Equation (SDRE) Control: A Survey. *17th IFAC World Congress*, pages 3761–3775.

J. R. Cloutier (1997). State-Dependent Riccati Equation Techniques: An Overview. *American Control Conference*, pages 932–936.

R. S. Sharp and V. Valtetsiotis (2001). Optimal preview car steering control. *Vehicle System Dynamics Supplement*, vol 35, pages 101–117.