Optimizing Power Consumption of Wi-Fi inbuild IoT device

Darshana Thomas, *University of Strathclyde,* Ross McPherson, *University of Strathclyde,*
Greig Paul, *University of Strathclyde,* James Irvine, *University of Strathclyde*

***Abstract*—The Internet of Things (IoT) – connection of small smart sensors, actuators and other devices to the Internet – is a key concept within the smart home. To ease deployment, such devices are often wireless and battery powered. An important question is the wireless interface used. The ubiquity of Wi-Fi in homes today makes this an attractive option, but the relatively high power requirements of Wi-Fi conflict with the requirement for long battery life and low maintenance. Lower power alternatives, such as Bluetooth and Zigbee, have been proposed, but these have a much smaller installed base. In addition, many Smart Home products are currently available using 433MHz technology.**

This paper considers whether it is possible to reduce Wi-Fi power usage to the point where cheap Wi-Fi based products can be used instead of other protocols. The paper undertakes power analysis of a wireless sensor with an SoC Wi-Fi module, with and without a separate microcontroller optimised for low power usage which can be used to switch the Wi-Fi module on and off. This paper is an extension of previous work comparing Wi-Fi and 433MHz devices, and so we compare 433MHz to the optimised Wi-Fi sensor. Finally, the paper considers the energy usage of DHCP, demonstrating that further energy savings can be made if the application handles IP addressing and presents a static IP address to the Wi-Fi module.

I. Introduction

The Internet of Things (IoT) is a networking paradigm whereby small sensors, actuators and other devices are connected to the Internet, either directly or through a hub unit. The devices then become accessible remotely, and so provide flexibility for the user to control their electrical devices from anywhere with the availability of an Internet connection. Smart Homes are a prime example of a system which utilizes small sensor devices which relay their data to a centralized HUB [10], where this information can then be redistributed to users or devices requiring data input. For example, a central heating system would benefit from temperature sensor readings.

SoC technology has allowed very complex wireless modules to be marketed at low cost, making which is encouraging the take up of the paradigm. Figure 1 illustrates some IoT examples, and there are very many applications which can be envisaged. According to Gartner the number of IoT devices will reach 6.4 billion this year. [4].

Wi-Fi is a relatively complex wireless protocol, but recently Wi-Fi modules have become available at low enough cost to facilitate their incorporation into IoT devices. This offers significant advantages as many homes now have Wi-Fi hotspots, and this combined with public access hotspots in city centers, hotels, and transportation means that Wi-Fi coverage is becoming ubiquitous. Using a Wi-Fi module means that the IoT device has direct connection to the Internet, and can for example use a web service without requiring a hub. This simplifies both deployment and software development. However, the complexity of Wi-Fi means that it is far less power efficient than other more specialised wireless technologies designed for sensors. While low power Wi-Fi is currently being standardised, the cheap Wi-Fi modules making low cost IoT devices possible use current Wi-Fi technology.

Power consumption is a major constraint for IoT devices, since they are likely to have to depend on batteries. Some IoT devices can be powered from the mains, for example a smart power socket or central heating controller. It is interesting to note that commercial examples of such devices often already incorporate Wi-Fi modules. However, mobile IoT devices, such as remote controls or smart buttons, are powered from batteries and use alternative wireless technology such as Bluetooth LE or 433MHz, while Zigbee offers another alternative as a wireless protocol specifically designed for low power sensor applications.

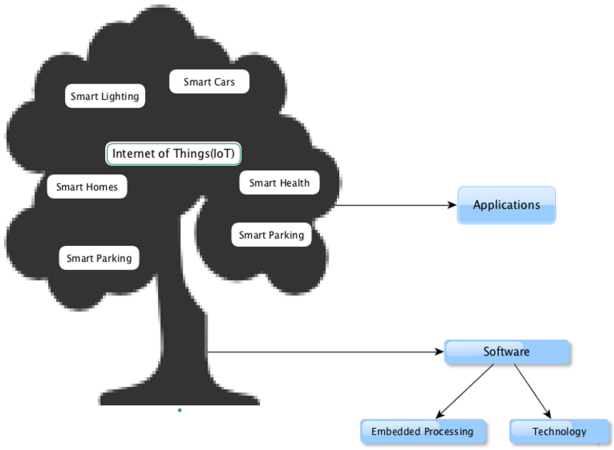

Fig. 1. Internet of Things Applications

The ubiquity of Wi-Fi means that it has great customer acceptance and ease of deployment – most customers should simply have to switch it on within the home, rather than having to buy additional hub units. Therefore, if Wi-Fi based devices could have acceptable battery life and reduced cost they would be of interest for consumers. However, not much research has

Email: darshana.thomas@strath.ac.uk

TABLE I. COMPARISON OF PROTOCOLS

	Bluetooth	Zigbee	Wi-Fi
Frequencies	2.4GHz	2.4GHz, 868/915MHz	2.4 GHz for 802.11b/g/n
Range	10m	Upto 100m	250m
Battery	DAYS	YEARS	HOURS

TABLE II. COMPARISON OF PROTOCOLS

	Bluetooth	Zigbee	Wi-Fi
Raw Data Rate	1Mbps	250Kbps(2.4GHz), 40Kbps(915MHz), 20Kbps(868MHz)	11Mbps(2.4GHz), 54Mbps(2.4GHz or 5GHz), 500Mbps(2.4GHz and 5GHz)

been done on Wi-Fi based IoT devices as Wi-Fi is generally considered to not be efficient enough in terms of power usage. For example, [16], [8] and [11] focused on the Zigbee or 433 aspects.

A comparison table showing the frequencies and estimated range is provided in Table I, a second Table II detailing the capacity of each technology.

In addition to the ubiquity of Wi-Fi, it has other attractive features if the power problem can be solved. In many applications it has a longer range than alternative technologies, and with a complete Internet stack built in to the module, it offers a plug and play option for service deployment.

This paper considers the optimisation of power consumption of an IoT device using a cheap commercial Wi-Fi module to see if it is practical to use such a module for a battery operated IoT device. **An alternative low power WiFi device CC3000 is also tested and compared with the low cost ESP8266 module. The power consumption results obtained for the WiFi inbuilt IoT device would let to come to a conclusion of whether its possible to replace the existing protocols with the WiFi.**

The paper is organized as follows: Section II discusses Wi-Fi and related work in Section III. Section IV discusses the experiments carried out within two sections followed by Section VII which discusses the results obtained. Finally, Section XI concludes the paper.

II. WI-FI

Wi-Fi or Wireless Fidelity offers very high data rates - theoretically up to 600 Mbps for the most commonly used 802.11n version controlled by Wi-Fi Alliance. A number of different versions are available with different operating frequencies and throughputs. The most widely adopted version currently deployed is 802.11n, which is compatible with early devices, albeit at lower speeds. The latest commercially available version is 802.11ac, offering higher speeds, but also the ability to support older devices. While useful for broadband access within the home, in sensor networks, typical Wi-Fi data rates are rarely used to their full potential. However, ability to support roaming and send large amounts of information in bursts is ideal for many applications. Range varies on implementation but it can cover up to 200 meters [12].

Wi-Fi offers security, both authentication of devices and encryption of transmitted data. Early versions of the standard were relatively insecure, but current devices implement WPA2 (Wi-Fi Protected Access II), which offers good security, especially given the very low amounts of data transmitted by IoT devices.

An interesting development in Wi-Fi is the Wi-Fi HaLow or IEEE802.11ah. This is an extension to the existing Wi-Fi standard targetted at IoT applications, which uses lower frequencies, allows longer range, and has support for extended sleep cycles and other power saving features. However, it is only expected to be standardised this year, and the variations with existing Wi-Fi means that it will not share the advantages of compatibility with existing deployed infrastructure. Our aim in this paper is to investigate whether currently deployed Wi-Fi is suitable for IoT devices.

III. RELATED WORK

There is a significant body of literature on the smart home concept and protocols within smart home. However, since Wi-Fi is normally discounted as requiring too much power, the focus has been on other wireless technologies.

Dongmei Yan *et al.* [17] discuss implementation of Zigbee in smart home products. The approach and implementation mentioned in this paper was at the time utilized within China's smart home industry. Later the concept of IoT devices within smart home was researched where authors have looked particulary into power consumption.

Karan Nair *et al.* [9] has discussed about reducing power consumption for IoT WSN using BLE. The paper discusses topologies used within the wireless sensor network followed by protocols such as Zigbee and Bluetooth. The authors compared the power consumption of Zigbee and NRF against BLE. From the results mentioned in the paper Zigbee and NRF has high wakeup times resulting in more power consumption whereas BLE connects faster and wakeup time is much lower. The work done in the paper does not consider real time monitoring.

As an extension to this work was considered in the paper by Artem Dementyev *et al.* [8] which discusses the disadvantage of using BLE in a cyclic sleep scenario. The experiment setup mentioned in the paper transmitted an 8 byte of data packet at certain sleep intervals. The power consumption was compared against Zigbee and ANT. From the results discussed within the paper Zigbee was efficient in a cyclic sleep scenario situation. The results were compared based on the reconnection time. Although BLE provided low power consumption value the time to reconnect after a cyclic sleep is much longer than Zigbee and ANT. This work has considered fixed packet sizes this could have an effect on the results. M.D Prieto*et al.* [11] looked into variable packet size. The results discuss about power consumption, but other factors such as processor, processing times and the cost has not been taken into consideration.

A number of surveys have been carried out on protocols such as Zigbee and BLE for wireless sensor networks, for example [13].

Kuor-Hsin Chang [7] discussed the suitability of BLE for IoT. According to the paper BLE supports star networks

and not mesh networks. Although work has been done for this aspect it is still to be confirmed if BLE could support mesh networks. For BLE to be considerd for IoT it has to be compatible with all types of topology for flexibility of developers to research upon the existing work.

In the paper [14] Kamlesh Sharma*et al.* discussed utilising an IoT system to reduce power consumption for devices or equipments used within the university campus. The idea is similar to smart home concept in which Zigbee nodes would communicate to sink node and to a central server. The power consumption is reduced using this technique within the university. With the work carried out for this paper in which Wi-Fi enabled device is developed the central node could be avoided resulting in less equipment and cost.

In the paper [15] the power consumption of the aforementioned Wi-Fi chip was compared with a comparable 433MHz AM transmission system. The paper discussed the utilisation of the ESP chip coupled with a ATMega328P processor, which is commonly found within the popular Ardiuno Uno device [1]. This work is taken forward in this paper by using a much more capable processor - an MSP430 produced by Texas Instruments. The finding in the previous paper are used as a bench mark within this paper.

The next section discusses about the procedures of the experiments and the results obtained by carrying out these experiments.

IV. Experiment

The CC3000 was one of the first highly integrated Wi-Fi modules to become available. Priced at significantly less than $10, the CC3000 allowed Wi-Fi to be connected to small devices with very little additional design effort. The CC3000 supports 802.11g, but not 802.11n like newer devices. When launched, the manufacturer claimed energy use per transmission down to 3.6 μAh, which is very impressive but is under ideal conditions and does not consider the rest of the circuit, including a controlling microcontroller which is required.

A further reduction in costs came with the introduction of the Expressif ESP8266 chipset. These are built into a number of modules, and can be obtained, with a microcontroller, for less than $5, providing a truely integrated solution. We consider two scenarios. In the first, the SoC capabilities of the Wi-Fi module were used to read the sensor and process the data, with no additional microcontroller. In the second scenario, a dedicated low power microcontroller was used for data processing and controlling the Wi-Fi module, allowing it to be switched off completely to save power.

A. DS18S20

The DS18S20 is a temperature sensor which operates over the one-wire interface. Each temperature sensor [2] device has its own unique code and its stored in the 64 bit ROM (Read-Only Memory) of the device. The memory(scratchpad) of the device would hold the 2 bytes of digital output data and would retain the data by providing access to two of its access registers. The scratchpad memory consists of CRC (Cyclic Redundancy Check) which would verify if the data received is error free. The scratchpad CRC would calculate a value based on the data within the scratchpad and would compare it with the read CRC. If both the values would match then the data received has no error within it.

B. ESP-03

The Wi-Fi module used for building the prototype is the ESP-03, which is based on the ESP8266 [3]. The cost of the chip is low and has all the advantages needed to convert it into a Wi-Fi device by suitable coding pushed onto the chip. The pin layout of the chip is provided below:

TABLE III. Chip Pin Connections

ESP-03 PIN	Connections
CHPD	HIGH
URXD	Receiving Pin for programming
UTXD	Transmitting pin for programming
GND	GND
GPIO0	LOW for programming
GPIO15	HIGH
GPIO16	I/O
GPIO2	I/O
GPIO14	I/O
GPIO13	I/O
GPIO12	I/O

Points to be taken into consideration for this chip is that few of the pins within the chip has to be high and other few has to be grounded all the time. The connection of this chip for the prototype is provided in the Table.

V. First Scenario

In the first scenario a prototype Figure 2 is build with ESP-03 and DS18S20 [2] sensor. For ESP-03 scenario the temperature sensor is connected to GPIO pin on the chip. The chip would do the entire process of reading the temperature data, connecting and transmission. The pinouts for prototype board is only used for programming. The temperature sensor transmits a fixed 7 bytes of data. The coding for the ESP is setup such that it would look for the sensor connected to the chip and would take the reading in Celsius. The temperature sensor is turned LOW within the code after taking the reading to reduce power consumption. Each time the code runs the sensor would go HIGH to take the reading then LOW during conversion. After the reading is obtained the ESP would connect to the server via router and transmit the obtained temperature data. An HTTP server was setup for recording data. As power consumption value has to be recorded a power measuring device Portapow [6] was used for measuring the power. The power reading was obtained in mWh. Power is measured for one transmission going up for different transmission times in seconds. The schematics of the prototype is provided in Figure 3 .

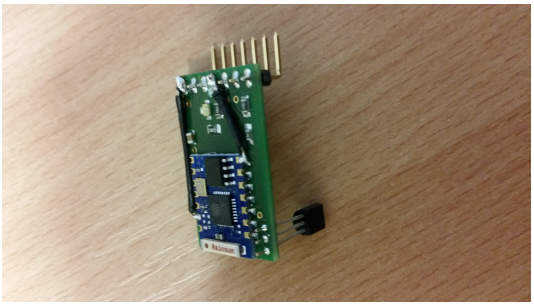

Fig. 2. ESP-03 Prototype

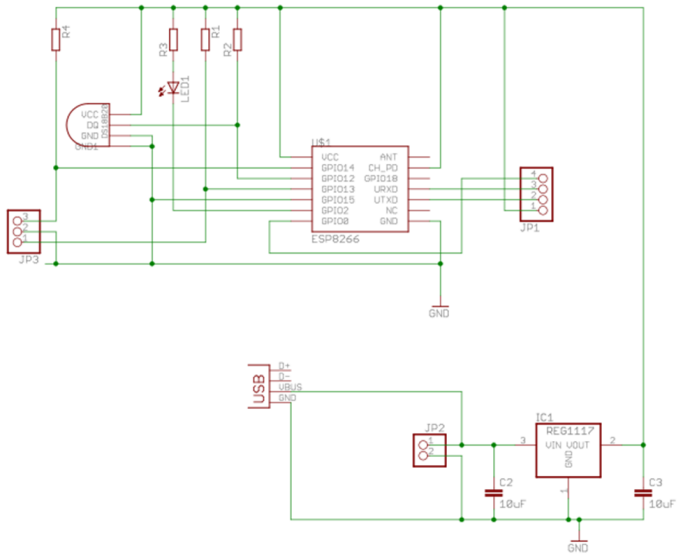

Fig. 3. ESP-03 Prototype Schematics

VI. Second Scenario

The prototype Figure 4 is built with MSP430 processor, an ESP-03 chip and a temperature sensor (DS18S20) for temperature reading. In the Figure 4 the difference for this prototype is addition of MSP430 [5] chip from the previous prototype, therefore the figure illustrates the back of the prototype where the MSP chip is added. The top part of the prototype is the same as Figure 2. More pinouts are provided for this prototype which is illustrated in Figure 4 to add any additional components if needed externally to this device for test purpose's.

In this prototype the MSP430 would read the data and use the ESP only for transmission. The data is transmitted with ten minutes delay.

The outcome for this scenario is expected to show less power consumption than the first scenario setup.

TABLE IV. Current Measurements

Deep Sleep ESP	15uA
Temperature Sensor current	15mA
ESP + MSP Deep Sleep	10uA

Fig. 4. MSP430+ESP-03 Prototype with Lithium Thionyl Chloride

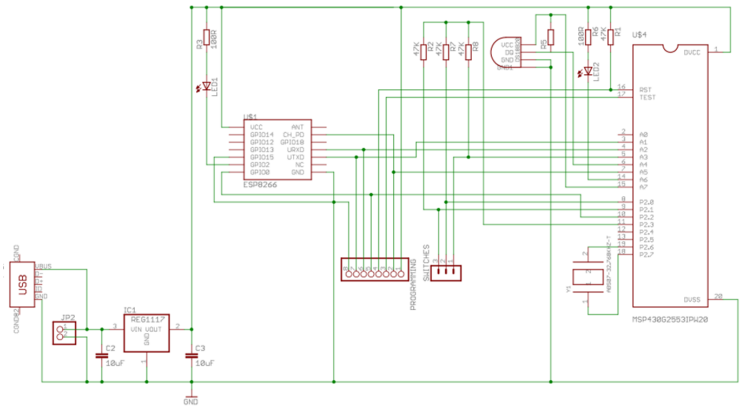

Fig. 5. ESP-03+ MSP430 Prototype Schematics

VII. Discussion of Results

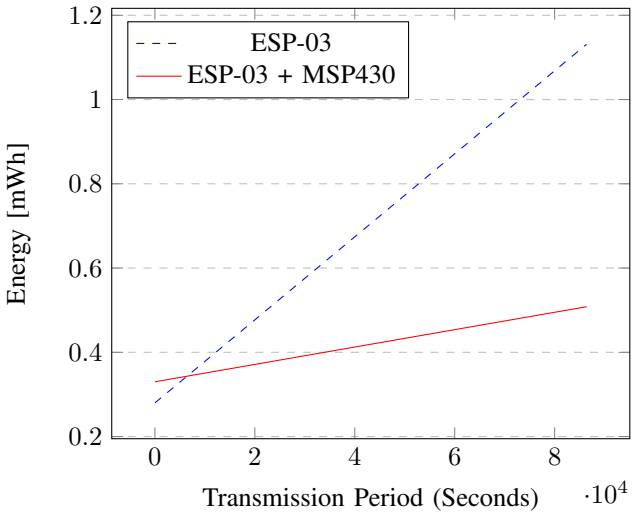

Fig. 6. Comparison of ESP-03 Vs MSP430

Table V shows the energy usage per transmission for the CC3000, ESP-03 alone (scenario 1) and ESP-03 and MSP430 combination (scenario 2). It can be seen that in all cases as the transmission interval increases, so does the energy use: this is due to the energy consumed

TABLE V. ENERGY USE PER TRANSMISSION

Transmission every	CC3000 (mWh)	ESP (mWh)	ESP+MSP (mWh)
10 minutes	1.268	0.285	0.331
30 minutes	1.277	0.297	0.333
1 Hour	1.289	0.315	0.337
2 Hour	1.316	0.350	0.344
3 Hour	1.343	0.421	0.359
4 Hour	1.370	0.563	0.389
1 Day	2.039	1.131	0.508

during the sleep cycle between transmission. However, the energy usage of the transmission itself dominates. The CC3000 has the poorest performance in terms of energy usage, and significantly higher than the manufacturer's claims. This is due to the fact that energy use of the complete system is considered, and the CC3000 requires quite a significant microcontroller to control it. The ESP-03, which is completely integrated, has lower energy usage. For long transmission intervals, the ESP-03 and MSP430 combination has lowest energy use.

For long-term fit-and-forget applications, Lithium Thionyl Chloride provide an excellent option with high energy density and low self-leakage. With a voltage of 3.6 volts and an ability to provide peak currents of tens of milliamps, no regulator is required for the ESP-03 which saves on energy use. Available in a range of capacities, the AA size battery provides between 2200mAh and 2500mAh depending on manufacturer. Allowing for leakage, such a battery would give three years life when transmitting every 4 hours, or over ten years life averaging one transmission per day.

Figure 6 illustrates the power saving obtained by using MSP430 and ESP-03 together in more detail. If the device has to run for longer periods of time, the second scenario with the MSP430 is the better option. Using the ESP-03 alone uses more energy as its power consumption in sleep mode exceeds that of the MSP430. If data is being sent frequently, and the sleep period is short, the additional energy used by the MSP430 exceeds the saving obtained by switching the ESP-03 off, so using the ESP-03 on its own would save power. Comparing the results, ESP03 with MSP, Figure 6, and ESP with ATMEGA processor, Figure 7, the MSP430 processor is better in terms of power saving. However, the majority of IoT devices installed in homes would have a relatively long period of time between transmissions.

As written within [15], it was discovered that with a low delay between transmissions the 433 MHz system used less energy than the ESP device. But for long periods of delay the energy consumed by the ATMega328P processor during sleep mode was still high, This paper extends this work and compares the results of using a MSP430 processor instead.

The results from the paper [15], Figure 7, has been compared with the results obtained for MSP430 with 433 MHz Figure 9. Although MSP430 + ESP03 uses significantly more energy for an equal number of transmissions over a given period, it is worth noting that due to physical limitations of operating at a higher frequency, 2.4 GHz vs 433 MHz. Coupled with the fact that in order to transmitt data the ESP-03 has to create the whole ISO stack, while the AM system can transmit on the equivalent to the physical layer. The energy requirements for the Wi-Fi system is always going to be higher. But the Wi-Fi system has a significantly higher data rates, so if a system is required a lot of bandwidth to be transmitted it would be more efficient to use the Wi-Fi system. Furthermore since when connecting to a secured wireless network authentication is required which means that only sensors which had been authorized to access and transmit on the network could provide information, therefore providing more security. Where as within a basic AM system any received signal will be interrupted allowing the possibility of false signals.

VIII. IP ADDRESS ALLOCATION

Home networks and Wi-Fi networks often use dynamic IP address allocation for ease of management. IP addresses are allocated using DHCP. In order scenario, since the ESP-03 is switched off to save power between transmissions, an address has to be allocated whenever the device is switched on, i.e., for each transmission. Since the transmissions are short, the DHCP exchange, although short, has an impact of battery life.

In fact, DHCP is a very flexible protocol, and could be used to send measurements without an overlaid Internet service, but the DHCP server would have to be configured to allow this. Since we want to use standard Internet protocols and reduce deployment issues, we would not want to use DHCP in this manner. However, in a home network, IP addresses are normally allocated for an extended period of time (for example, 24 hours). For the MSP430 based device, the MSP430 can be used to store the allocated IP address between transmissions, so when the ESP-03 is switched on it can use a 'static' address from the MSP430. We have investigated power consumption with 'Static' IP to investigate the reduction in power consumption. through the saved DHCP exchange.

Using the results a graph of comparing static and DHCP IP address allocation on both the standalone ESP-03 and the ESP-03 + MSP430 was created as shown in Figure 8. As shown in the graph there is roughly 30% reduction in energy consumption when using static IP address allocation compared to DHCP on each transmission. This experiment provided that it was possible to further reduce the energy consumption of the device by using long DHCP leases, but at some reduction in adaptability, so it was decided to continue using DHCP for the remainder of the experiments.

IX. SENSOR ACTIVATION

The sensor used for this prototype had a standby current resulting in power used up by both sensor and ESP during sleep mode.For temperature sensor with shutdown feature the standby current of 750nA, for the DS18s20, could be saved and in the long run this would result in more power saving. Replacing the sensor with a no standby current would be an option for future to reduce power usage. The temperature sensor would be HIGH while taking the reading and is turned LOW within the code before it goes into sleep mode. This would reduce the power and only the standby current would be used up.

X. Bidirectional Communications

The scenario we have considered is for unidirectional communications from the sensor node to the Internet, which fits well with a sensor gathering readings or a smart button triggering an alert. Bidirectional communications has significant implications on energy use, as the reception circuitry has to be left on in listening mode. For Wi-Fi, bidirectional communications requires the device to be attached to the access point, which requires it to be active to receive beacon frames. The ESP8266 has a light sleep mode which has a timer to switch the CPU and radio circuitry off between beacons to save power, waking the chip up before the next beacon. However, while this offers significant reductions over the keeping the chip active, the overall power usage remains in the 0.5−1mA range, which is clearly far too high for long term battery operation. Wi-Fi therefore does not offer a solution where asynchronous bidirectional communication is required.

If delays can be tolerated, for example for updating configuration values, data can be sent to the sensor as part of the acknowledgment when the sensor sends data to the server, or the sensor can periodically poll the server even if there is no data to be sent. Our measurements already allow for an acknowledgement as part of the HTTP exchange—adding some additional bytes to send data would have very little effect on the energy usage.

XI. Conclusion

Based on the results from this paper, when combined with a low power processor such as the MSP430, the ESP-03 is power efficient to be used in IoT device, so Wi-Fi based battery operated IoT devices are practical. The results illustrated the fact that using ESP-03 on its own is only efficient if its to be used for a short period of time. If the ESP-03 was coupled with MSP430 then the power usage reduces and is much more efficient in the long term to be used for longer period of time. The power consumption results were then carried out using DHCP and STATIC IP to demonstrate the power saving by using STATIC IP instead if DHCP which is used majority of the time to reduce complexity. The use of the processor MSP430 showed increase power saving than the use of ATMEGA processor.

Using a lower voltage 433MHz AM transmitter used less power than MSP430+ESP03 but taking into account the low transmission range and security aspects, the MSP430+ESP03 is a more flexible choice. In terms of range and security Wi-Fi is better therefore it is much more effective for IoT devices.

XII. Acknowledgements

This work is supported by Treegreen and Strathclyde University.

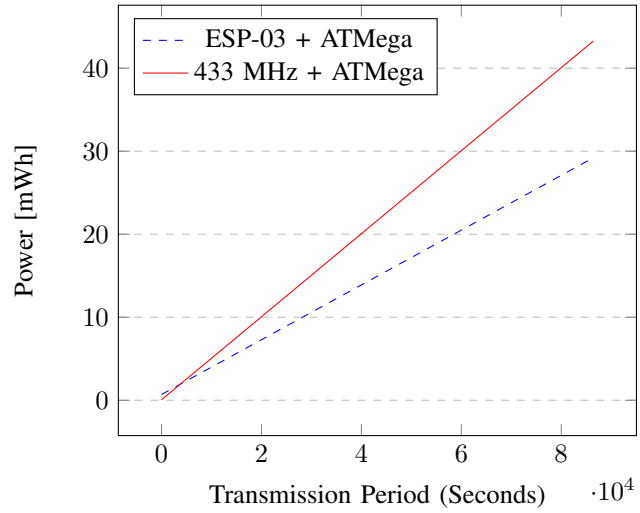

Fig. 7. Comparison of Wi-Fi vs 433 MHz when using ATMega Chip [15]

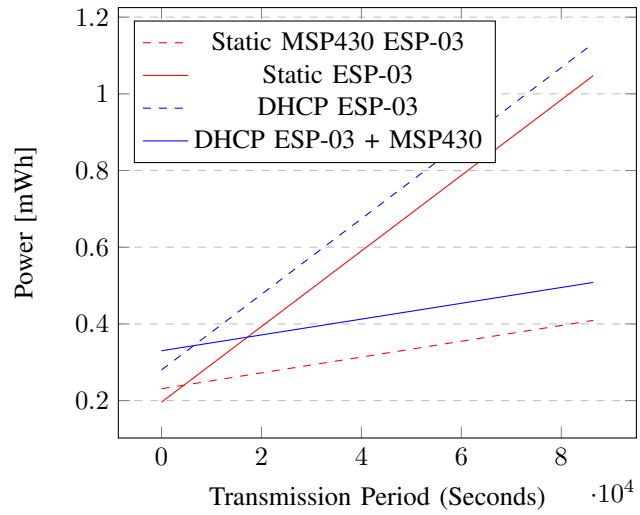

Fig. 8. Comparison of Static IP assignment vs DHCP

References

[1] Ardiuno Uno. https://www.arduino.cc/en/main/arduinoBoardUno.

[2] Datasheet. https://datasheets.maximintegrated.com/en/ds/DS18S20.pdf.

[3] ESP8266. http://espressif.com/en/products/hardware/esp8266ex/overview.

[4] Gartner Says 6.4 Billion Connected "Things" Will Be in Use in 2016, Up 30 Percent From 2015. http://www.gartner.com/newsroom/id/3165317.

[5] Mixed SIgnal Microcontroller. http://www.ti.com/lit/ds/symlink/msp430g2553.pdf.

[6] Portapow. http://www.portablepowersupplies.co.uk/portapow-premium-usb-dc-power-monitor/.

[7] K. H. Chang. Bluetooth: a viable solution for iot? [industry perspectives]. *IEEE Wireless Communications*, 21(6):6–7, December 2014.

[8] A. Dementyev, S. Hodges, S. Taylor, and J. Smith. Power consumption analysis of bluetooth low energy, zigbee and ant sensor nodes in a cyclic sleep scenario. In *Wireless Symposium (IWS), 2013 IEEE International*, pages 1–4, April 2013.

[9] K. Nair, J. Kulkarni, M. Warde, Z. Dave, V. Rawalgaonkar, G. Gore, and J. Joshi. Optimizing power consumption in iot based wireless sensor networks using bluetooth low energy. In *Green Computing and Internet of Things (ICGCIoT), 2015 International Conference on*, pages 589–593, Oct 2015.

[10] C. Perera, P. Jayaraman, A. Zaslavsky, P. Christen, and D. Georgakopou-

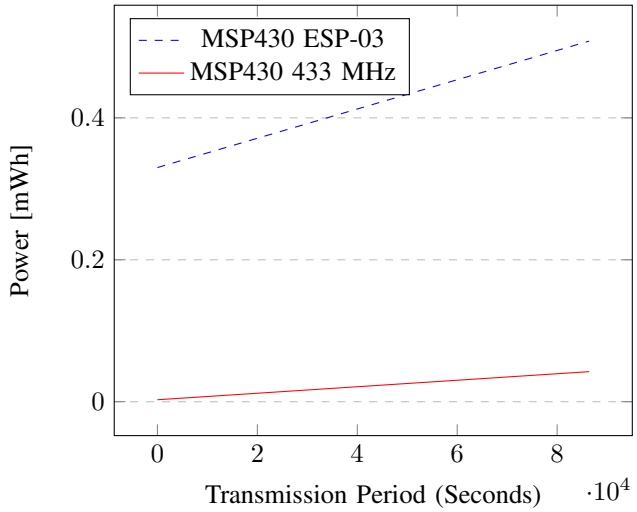

Fig. 9. Comparison of Wi-Fi vs 433 MHz using MSP430

los. Dynamic configuration of sensors using mobile sensor hub in internet of things paradigm. In *Intelligent Sensors, Sensor Networks and Information Processing, 2013 IEEE Eighth International Conference on*, pages 473–478, April 2013.

[11] M. D. Prieto, B. Martinez, M. Montn, I. V. Guillen, X. V. Guillen, and J. A. Moreno. Balancing power consumption in iot devices by using variable packet size. In *Complex, Intelligent and Software Intensive Systems (CISIS), 2014 Eighth International Conference on*, pages 170–176, July 2014.

[12] Gil Reiter. Wireless connectivity for the Internet of Things. 2015.06.20.

[13] A. Sharma and G. S. Tewolde. Considerations in low power wireless sensor networks. In *2015 IEEE International Conference on Electro/Information Technology (EIT)*, pages 626–631, May 2015.

[14] K. Sharma and T. Suryakanthi. Smart system: Iot for university. In *Green Computing and Internet of Things (ICGCIoT), 2015 International Conference on*, pages 1586–1593, Oct 2015.

[15] D. Thomas, R. McPherson, and J.Irvine. Power analysis of local transmission technologies 'to appear'. In *12th IEEE Conference on PhD Research in Microelectronics and Electronics (PRIME)*, 2016.

[16] Dongmei Yan and Zhiguang Dan. Zigbee-based smart home system design. In *2010 3rd International Conference on Advanced Computer Theory and Engineering(ICACTE)*, volume 2, pages V2–650–V2–653, Aug 2010.

[17] Dongmei Yan and Zhiguang Dan. Zigbee-based smart home system design. In *2010 3rd International Conference on Advanced Computer Theory and Engineering(ICACTE)*, volume 2, pages V2–650–V2–653, Aug 2010.

XIII. Biographies

Darshana Thomas (darshana.thomas@strath.ac.uk) is a Ph.D. researcher in the Mobile Communications Group at the University of Strathclyde, Glasgow, United Kingdom.

Ross McPherson (ekb12174@uni.strath.ac.uk) is a undergraduate student undertaking the Computer & Electronic Systems degree at the University of Strathclyde, Glasgow, United Kingdom.

Greig Paul is a is a Ph.D. researcher in the Mobile Communications Group at the University of Strathclyde, Glasgow, United Kingdom.

James Irvine (j.m.irvine@strath.ac.uk) is a reader and head of the Mobile Communications Group at the University of Strathclyde, Glasgow, United Kingdom.