LVDC-Redefining Electricity

First International Conference on Low Voltage Direct Current

New Delhi, India,
26 & 27 October 2015

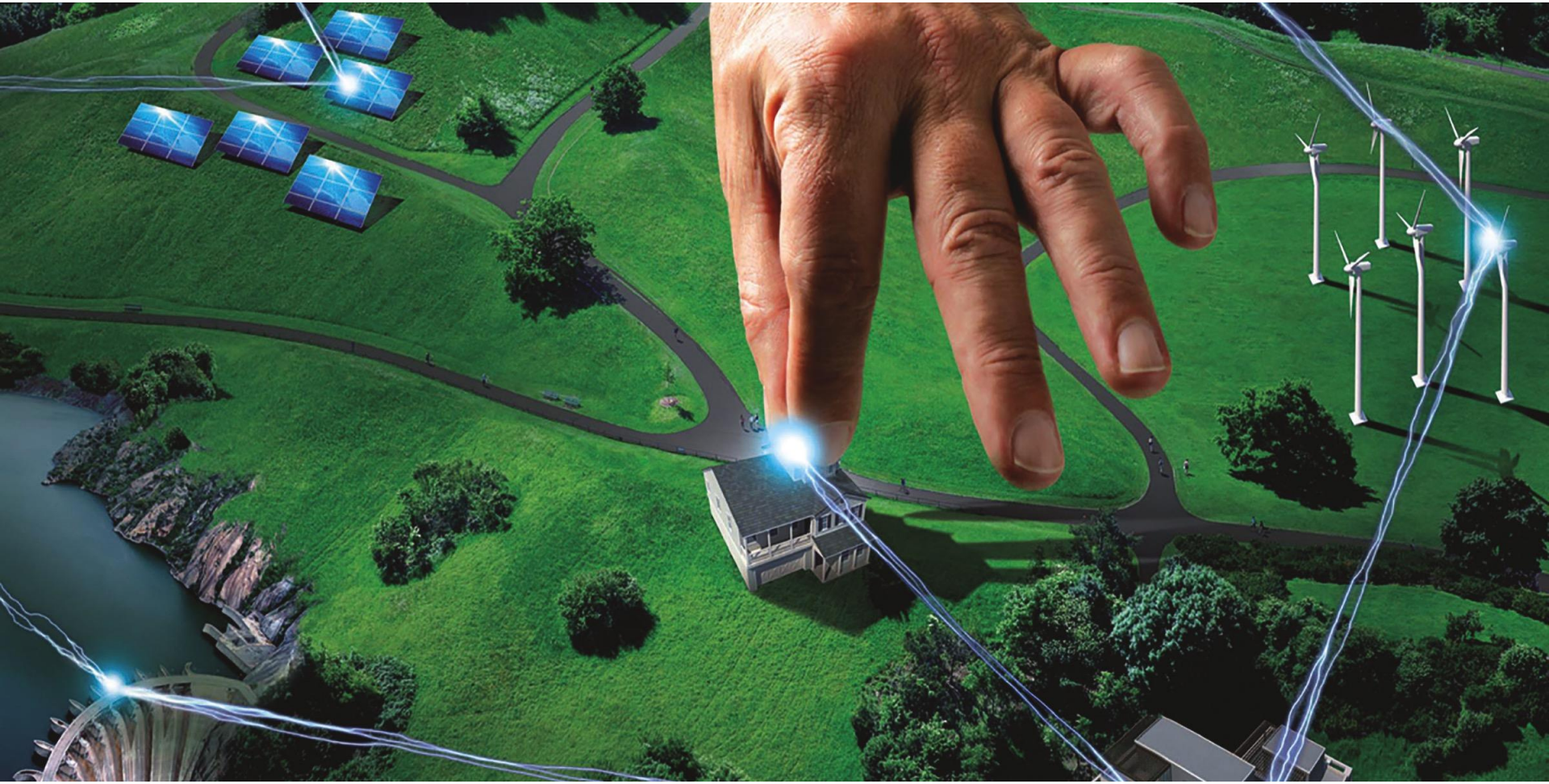

International Electrotechnical Commission

Bureau of Indian Standards

Enabling an LVDC last mile distribution network

Dr Abdullah Emhemed

Prof Graeme Burt

University of Strathclyde

Department of Electronic and Electrical Engineering

Technology and Innovation Centre

Abdullah.emhemed@strath.ac.uk

Tel: +44 141 4447274

Glasgow-United Kingdom

Overview

1. Issues with an existing LVAC last mile network
2. Moving to an LVDC last mile: motivations
3. Moving to an LVDC last mile: challenges
4. Protection challenges
5. Protection solution
6. Conclusions

1. Issues with existing LVAC last mile

Under pressure to host more renewables

Operates at 60 -70% of their limits with losses 3%

Requires AC-DC conversion for supplying DC loads and hosting renewable

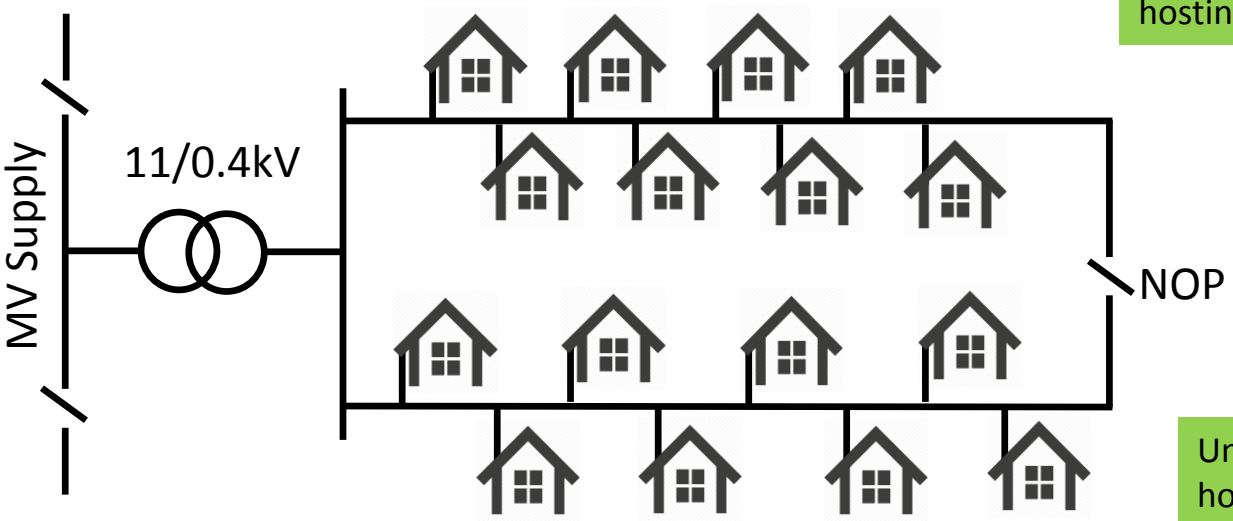

Distribution networks are aging

Benefit the least from load diversity

Under pressure to host more heat and transport demand

Become a bottleneck to connect further EV and heat pumps, power flow could reach up to 130%-150% in future UK system

2. LVDC last mile: motivation

Potential benefits for DSOs

Reduced losses and increased power capacity

Better control of peak demands

Addressing the technical constraints (enhanced voltage profile, limited impact of the inductance, no skin effect, etc.)

Release additional generation and demand headroom, and defers reinforcement

flexibility in operation offers more flexible market mechanism with better stimulation of customers control demands

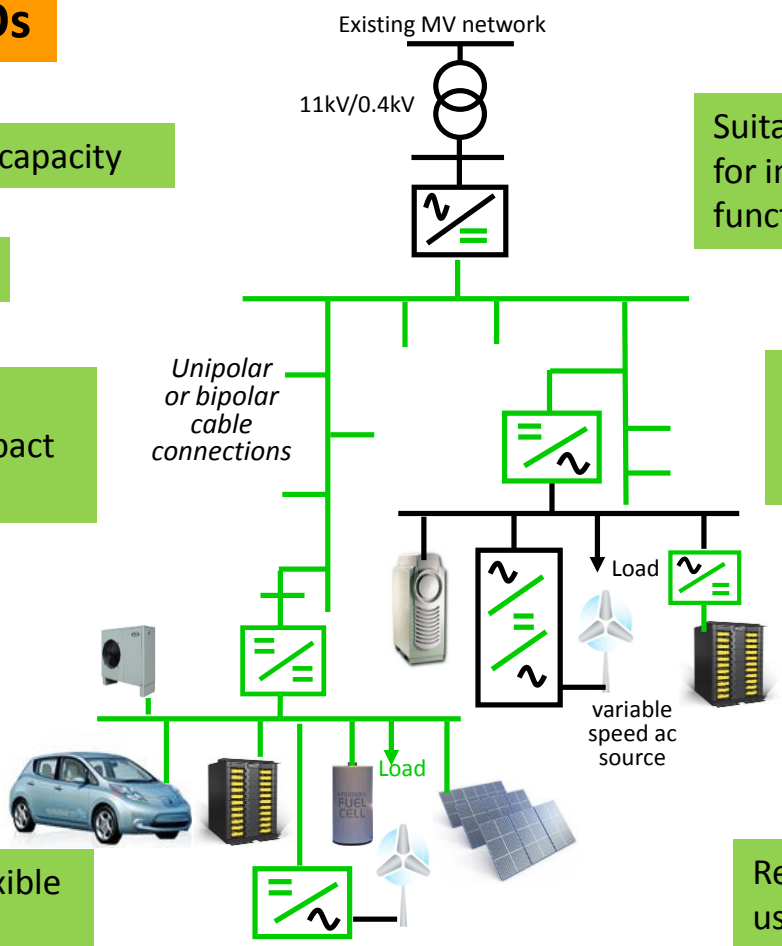

Suitable and powerful ICT platform for integrating various smart grid functionalities

Supporting better controls, and easier to connect multiple sources

No phase balance and synchronisation issues

Reduced fault level and allow the use of lower current ratings and smaller footprint

2. LVDC last mile: motivation

University of Strathclyde Engineering

Potential benefits for DSOs

Selected projects of DC in distribution

- ScottishPower £15m ANGLE – DC project
- KEPCO aims to replace a number of existing AC rural MV distribution networks supplying light loads by LVDC networks to save up to 5% of the total operating cost
- Real rural LVDC network as a part of Finnish national Smart Grids research programme

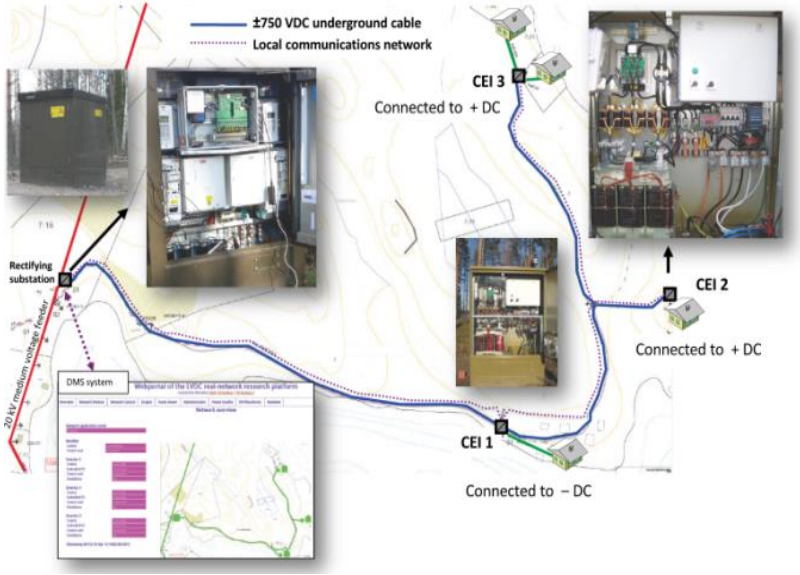

P. Muutinen et al. "Experiences from use of an LVDC system in public electricity distribution" CIRED 2013

2. LVDC last mile: motivation

University of Strathclyde Engineering

Potential benefits for end-users

Reduced energy waste and losses by reducing AC-DC conversion stages

Better control of energy leads to better market services and consumers cost savings

More suitable for devices generate and consume DC (**80% of todays load are DC**)

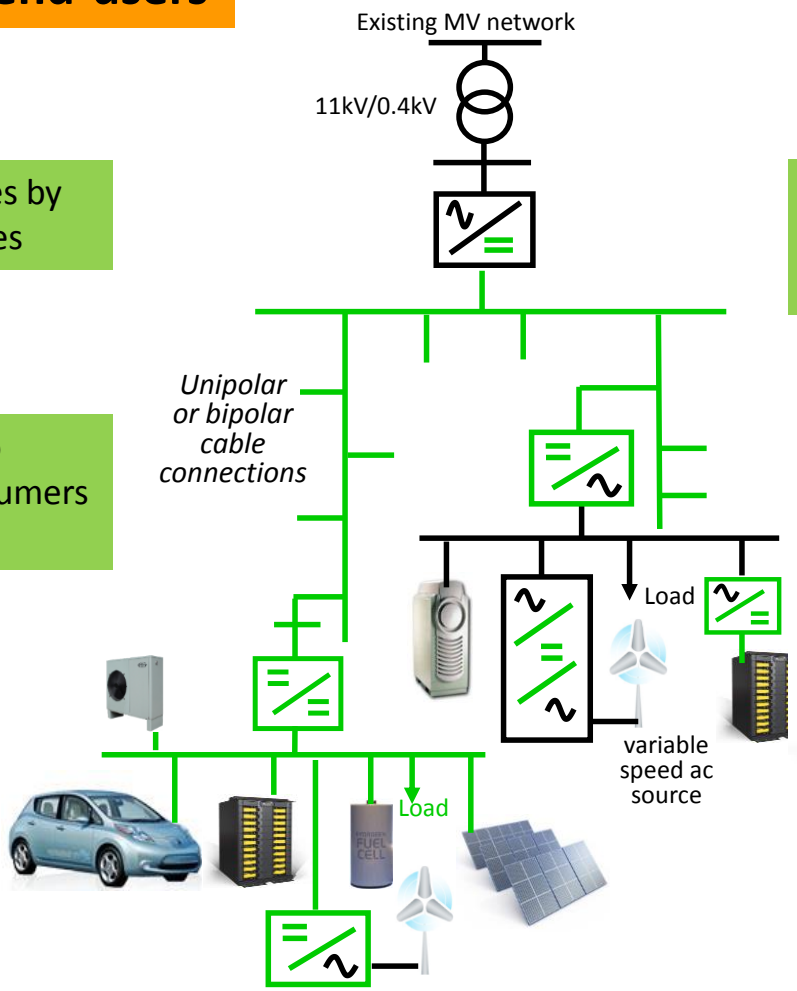

Power converter interfaces are more mature and their associated costs are declining

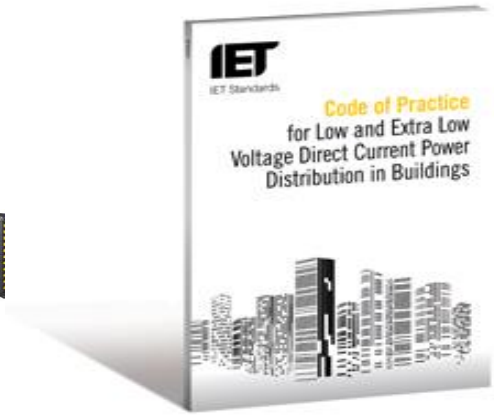

2. LVDC last mile: motivation

University of Strathclyde Engineering

IET LVDC Code of Practice

- Section 4: Recognised standards of d.c. power distribution over telecommunications cabling
- Section 5: Proprietary d.c. power distribution over telecommunications cabling
- Section 6: Proprietary d.c. power distribution over proprietary cabling
- Section 7: Proprietary d.c. power distribution over conventional single phase a.c. power supply cabling
- Section 8: Proprietary d.c. power distribution over conventional 3-phase a.c. power supply cabling

Cabling
Systems
Thermal considerations
Practical impact of thermal effects
Controlling injected power
Recommendations
Cabling acceptance and trouble-shooting testing

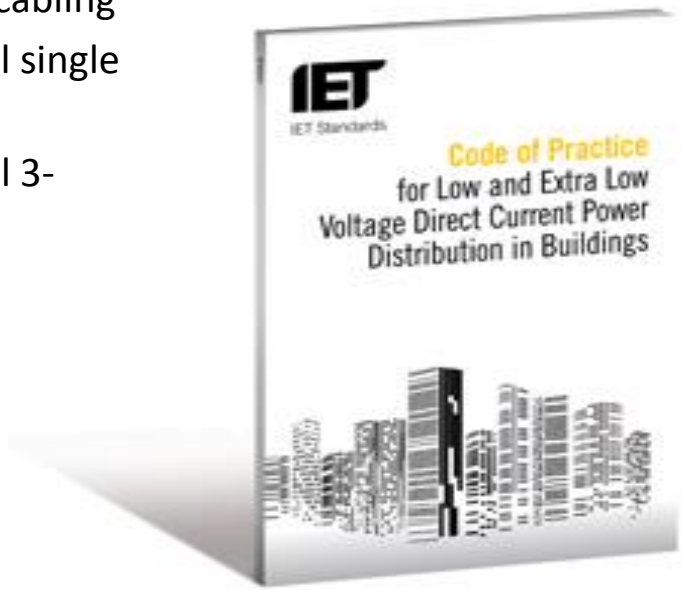

Verification of existing a.c. power supply cabling
Capability assessment
Implementation
Co-existence issues
Labelling
Certification Protocol

If we are designing the first last mile today, would be an AC or DC?

3. LVDC last mile: challenges

University of Strathclyde Engineering

- Very limited experience
- Huge investment in AC
- Interaction with existing AC grid
- Lack of standards (topology, voltages, cable connections, etc.)
- international systematic approach on LVDC not yet provided
- LVDC benefits versus the cost
- Existing LV protection is too simple and not capable of enabling the potential benefits afforded by LVDC last mile networks

4. Protection challenges

University of Strathclyde Engineering

Protection is top priority of any electrical distribution system

Does DC protection require more caution?

- Characterisation of DC faults
- DC protection for safety challenge
- The requirement for high speed DC protection
- Detecting and locating DC faults challenge
- Protection against DC voltage disturbances
- DC faults interruption challenge

Characterisation of DC faults

The traditional methods used for DC fault calculations:

- Static mathematical model
- mathematical model implemented in some ANSI/IEEE guidelines
- IEC 61660-1 dynamic mathematical model

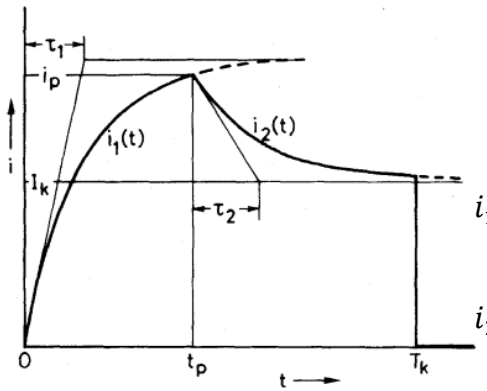

$$i_1(t) = i_p \frac{1-e^{-t/\tau_1}}{1-e^{-t_p/\tau_1}} \quad 0 \le t \le t_p$$

$$i_2(t) = i_p\left(1-\frac{I_k}{i_p}\right)e^{-\frac{t-t_p}{\tau_2}} + \frac{I_k}{i_p} \qquad t \ge t_p$$

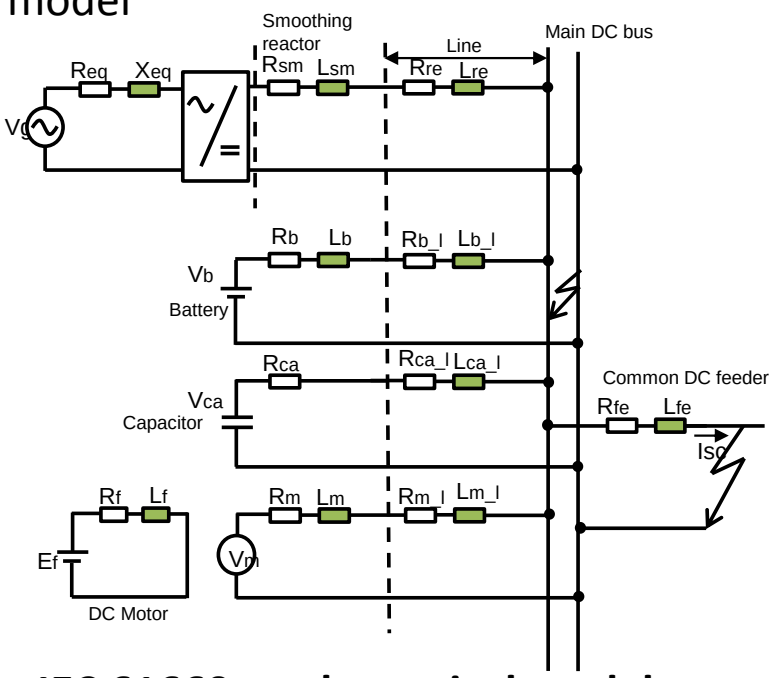

IEC 61660 mathematical model

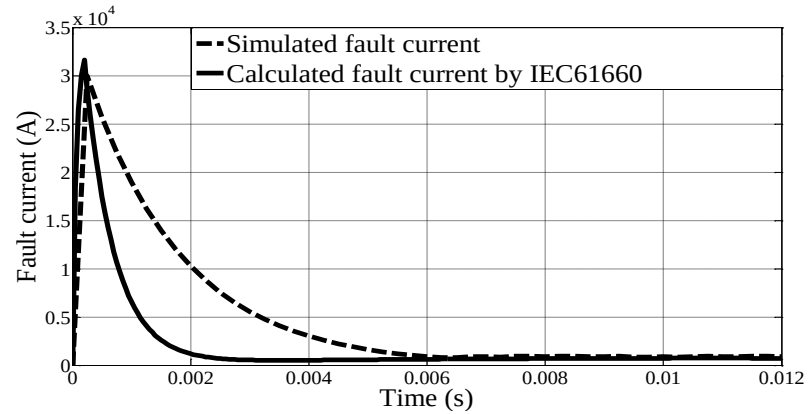

Q: Is IEC 61660 suitable for characterising LVDC short circuit currents under all possible system configurations?

DC protection for safety challenge

Band II (LVDC) | Band I (ELVDC)

1500V | 400V | 200V | 120V | 60V | 30V | 0V

Dangerous and could kill in case of direct contact

Comparable safety margin can be provided only with 3-wire system with grounded middle point

Comparable safety margin as for AC for direct contact (IEC60479) can be provided in 2-wire & 3-wire systems

For <30V and in normal dry conditions for <60V, ***basic protection is not required for SELV and PELV systems***

Protection for safety : RCDs are not widely and commercially available for DC

Protection for equipment: detecting, locating, and interrupting DC faults are challenging

*The IEC 23E/WG2 workshop, "DC distribution system and consequences for RCDs"

DC protection for safety challenge

University of Strathclyde Engineering

How does DC influence the existing earthing systems?

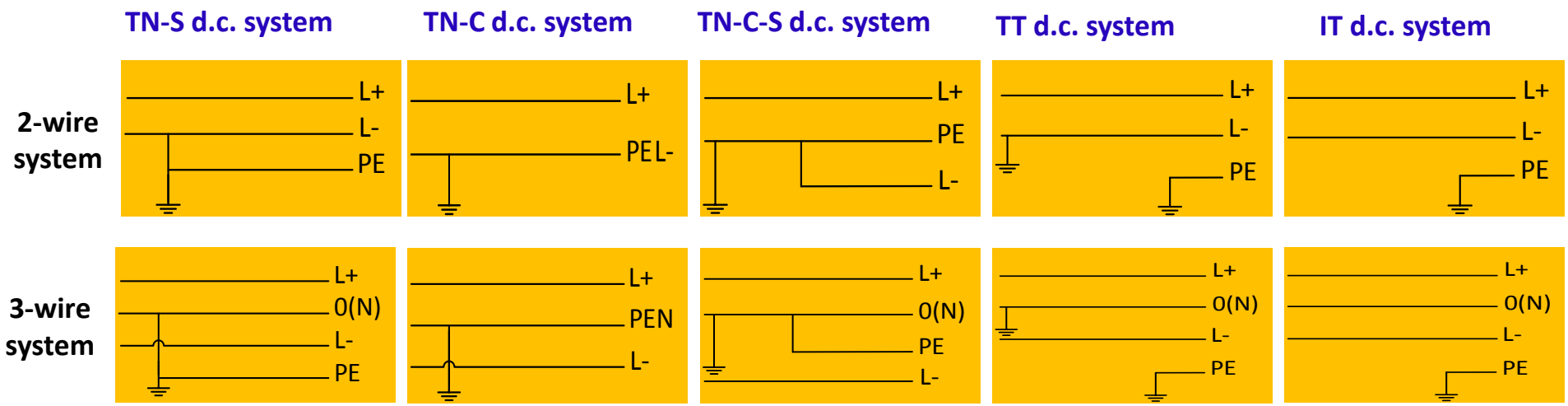

3-wire DC systems can have lower touch voltages

The requirement for high speed

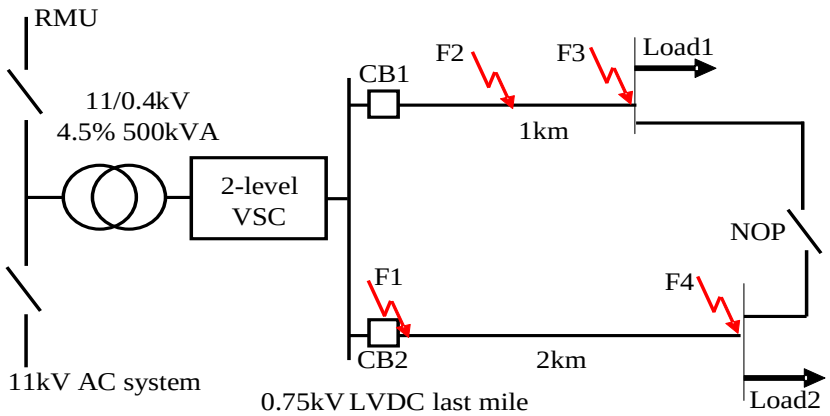

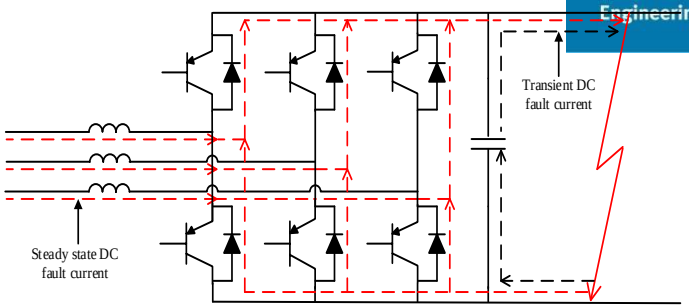

- Power electronics poor short circuit capability
- DC current circulates in the converter and other sensitive equipment
- Protection systems need to be very fast to
  - prevent a high transient and steady state DC currents from damaging equipment
  - prevent the main converters from losing control and unnecessary tripping; and
  - reduce the impact of post-fault power quality and stability

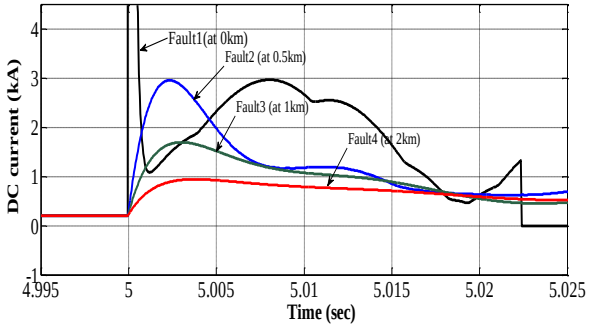

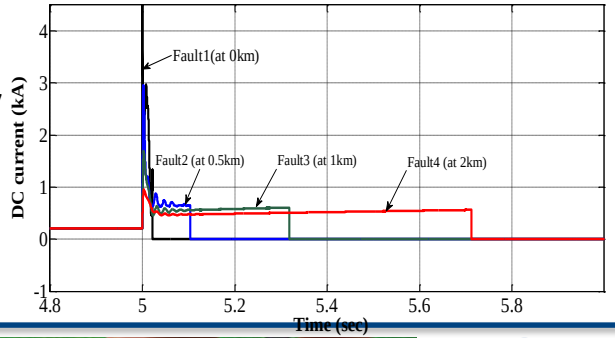

Detecting and locating DC faults challenge

- The natural small DC line impedances can lead to more complexity for locating DC faults
- Resistive faults hard to detect

Solutions

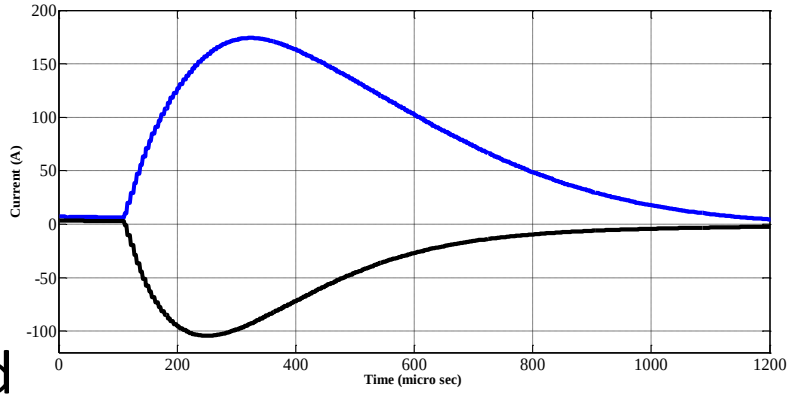

Using differential protection (time synchronisation issue)

Using signal processing techniques-based protection such as Travelling waves and Active Impedance Estimation (AIE)

Protection against DC voltage disturbances

University of Strathclyde Engineering

Rapid DC voltage drop

- Fast propagation of voltage disturbance
- Sensitivity of AC/DC and DC/DC to voltage drops

Overvoltage on the DC side

- caused by a line-to-earth fault on the AC side
- Caused by the loss of the supply DC neutral/earth of a bipolar DC system
- Post-fault transient overvoltage due the release of substantial energy stored in the inductor ($(\frac{1}{2}LI^2)$) due slow protection

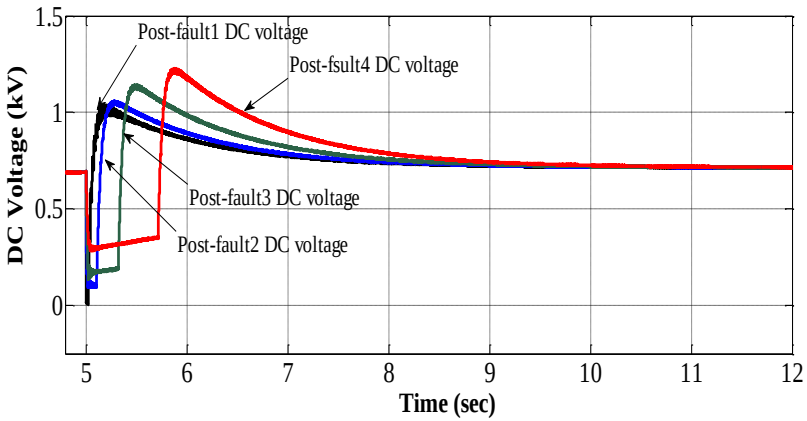

Voltage surge protection or fast protection that reduces the fault duration and magnitude are required

DC faults interruption challenge

University of Strathclyde Engineering

- DC arcs are more aggressive than AC
- DC fault without zero crossing do not provide a natural low point to extinguish the fault arc
- More complex techniques such as increased arc length and arc splitters are required

DC faults interruption challenge

Mechanical breakers complied with IEC 60947-2

- LVAC Moulded Case CBs and Miniature CBs (magnetic trip units to be adjusted for DC)
- DC CBs equipped with permanent magnetic
- DC CBs equipped with electronic trip units
- Lower DC current and voltage ratings compared to equivalent AC due to the higher risk of fire in DC

DC solid state breakers

- 900 times faster than LVDC mechanical breaker
- On-state losses issues

http://www.electronicproducts.com

Using different converter topologies

- Full bridge DC/DC chopper
- full-bridge Modular Multi-level Converters

DC hybrid breakers????

5. Protection solution

Multi-function DC protection for enabling an LVDC last mile

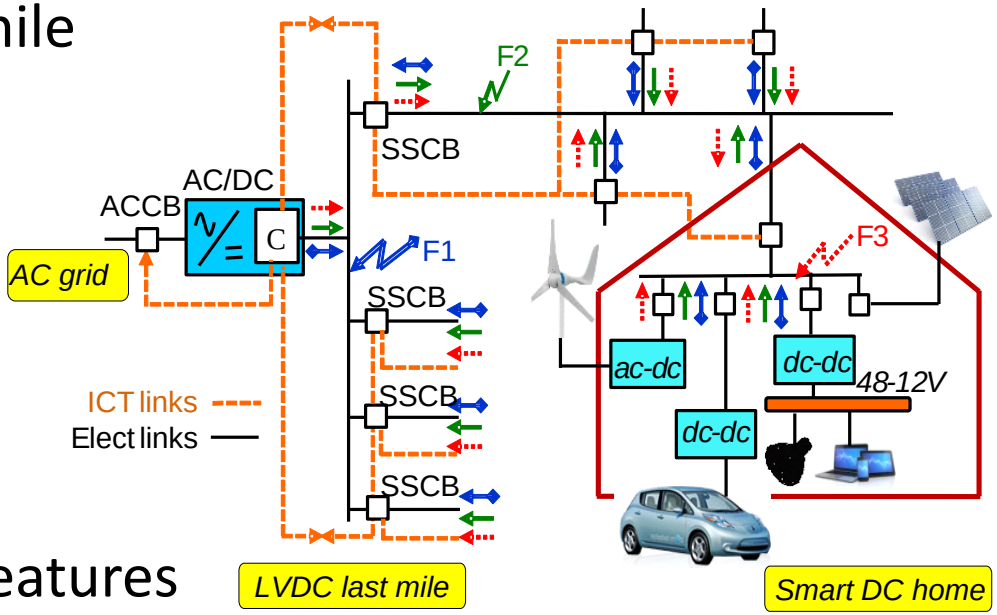

Protection functions	Relays	C	IED1	IED2	IED3	IED4
	Current directions	1	0	0	0	0
Trip function		✓	-	-	-	-
Blocking reverse current		-	✓	✓	✓	✓
Reclosing function		-	-	-	-	-

Protection functions	Relays	C	IED1	IED2	IED3	IED4
	Current directions	1	1	0	0	0
Trip function		-	✓	-	-	-
Blocking reverse current		-	✓	✓	✓	✓
Reclosing function		-	✓	-	-	-

Features

Communication-assisted

Fault detection and locations are based on DC current directions and magnitudes, and DC voltages

Using multiple IEDs

Using solid state circuit breakers for interrupting DC faults

LVDC testing facilities

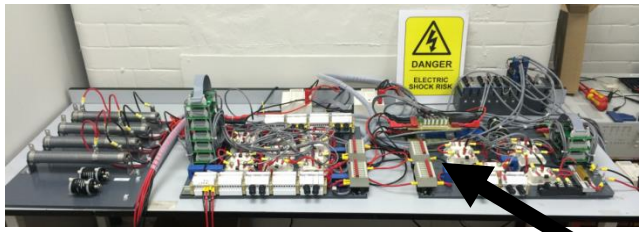

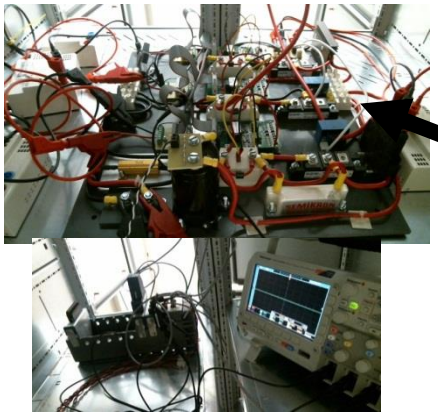

R134e Birds Eye View
Not to Scale

Restricted Zone

Mains

Fault Circuit
and Housin

Steel
Caging
(restricted
access)

Mains
Cabling

Signal
Cabling

Testing and Prototyping

Entrance

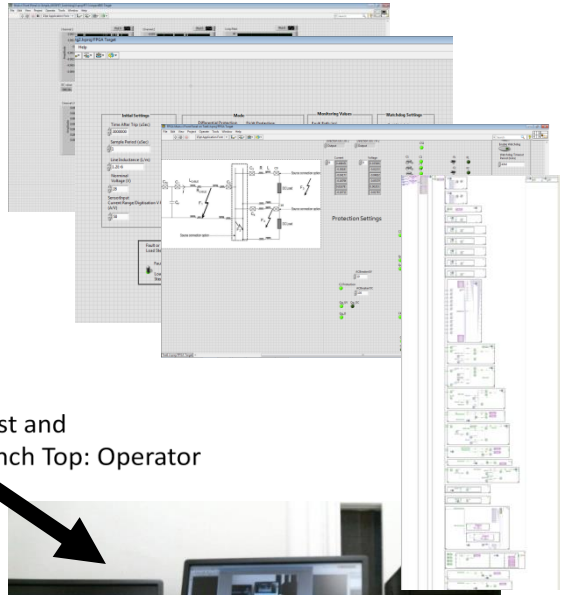

Host and
Bench Top: Operator

Validating the concept

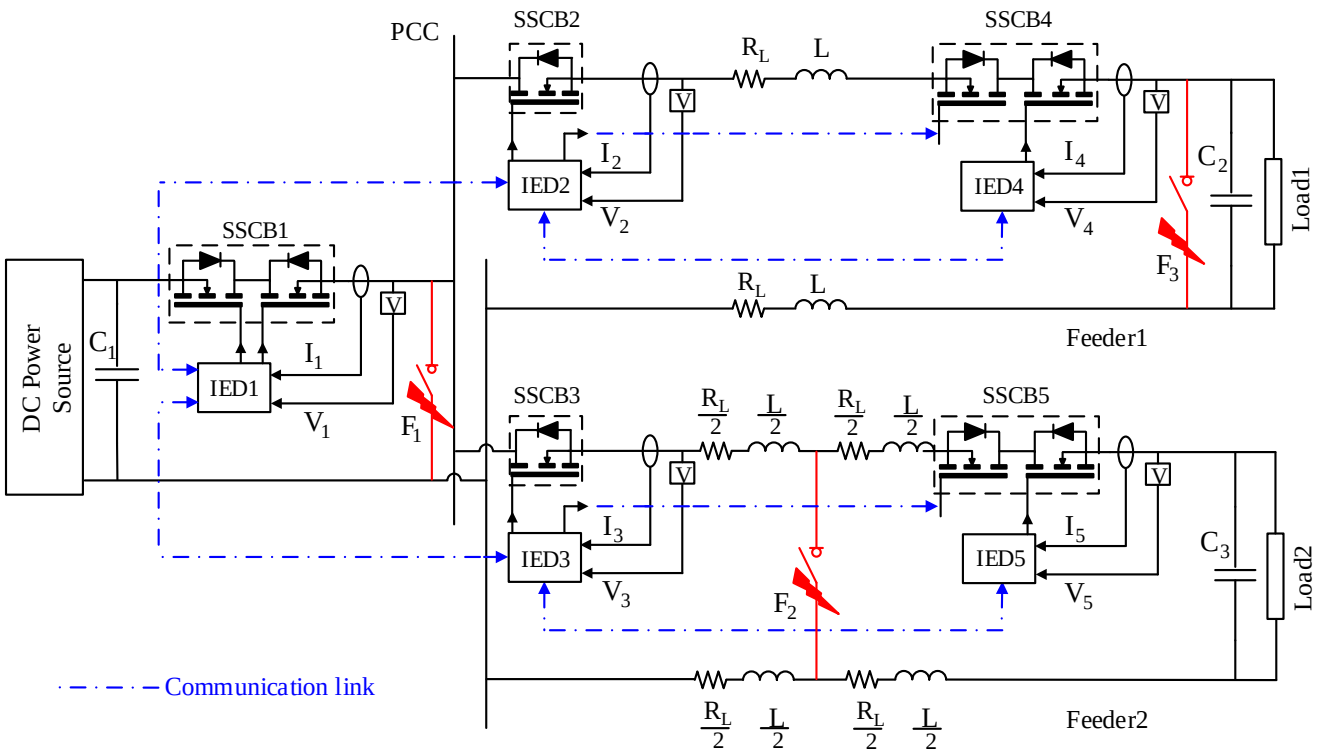

LVDC experiment circuit schematic

Validating the concept

Loads

Mimic LVDC cables

CRIO: hardware-software interface

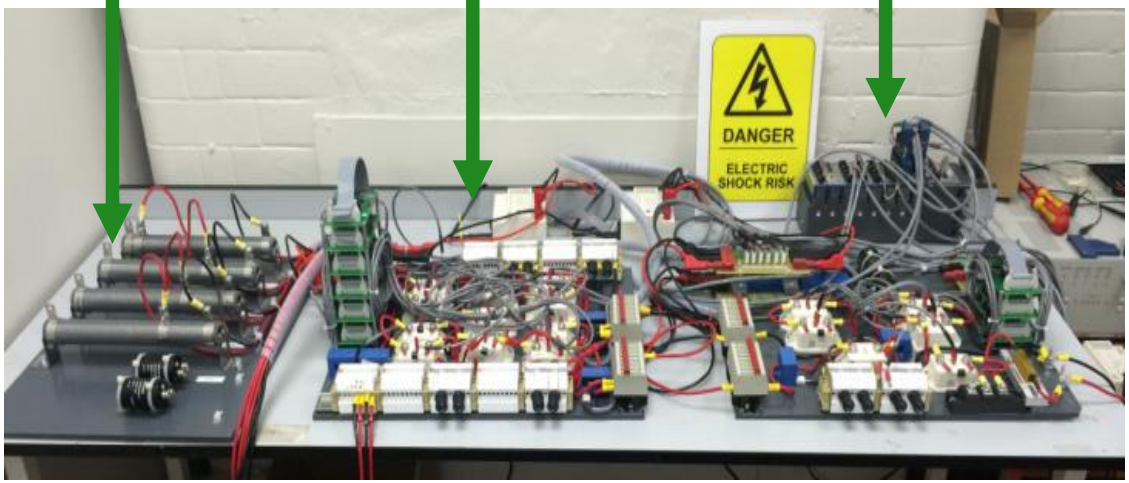

Actual experiment setup

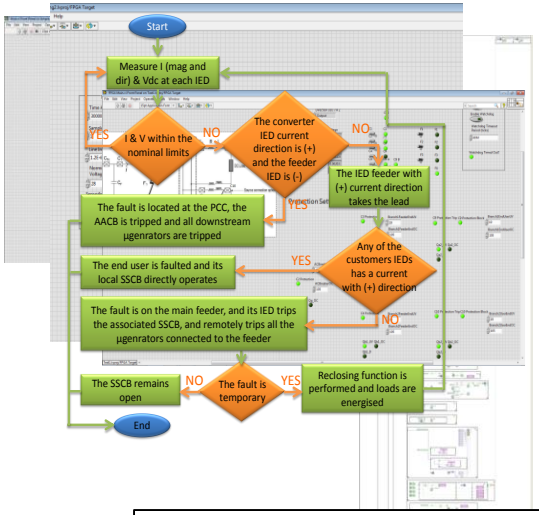

Deployment of the Algorithm using LabVIEW

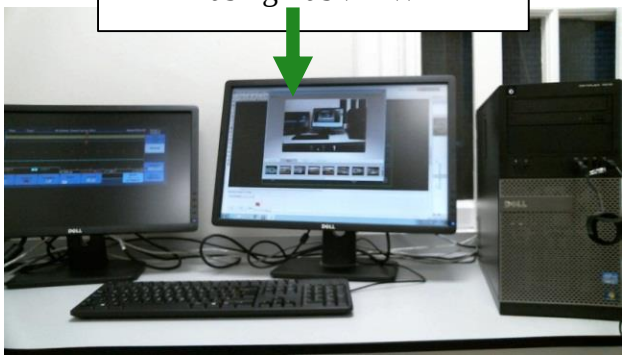

Experimental results

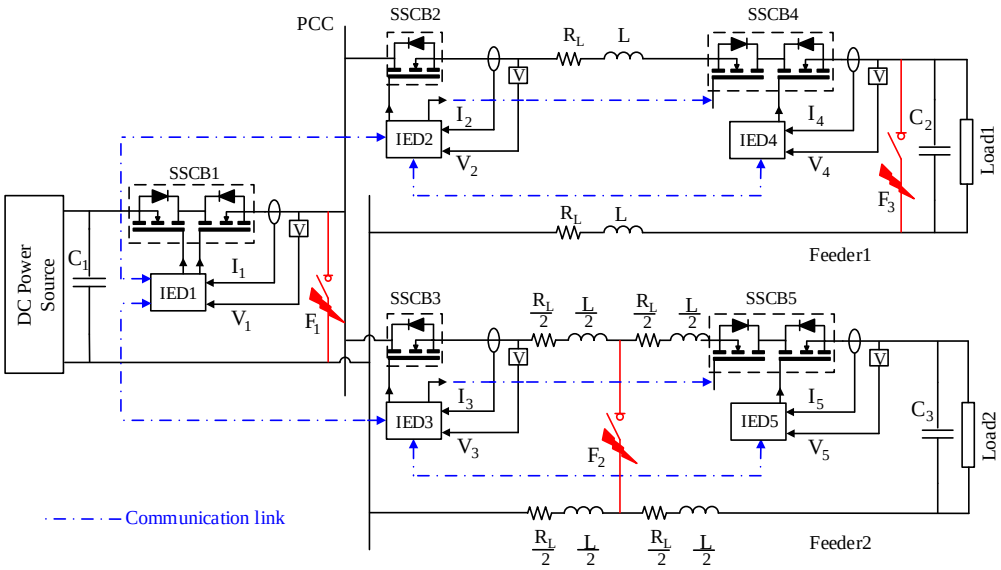

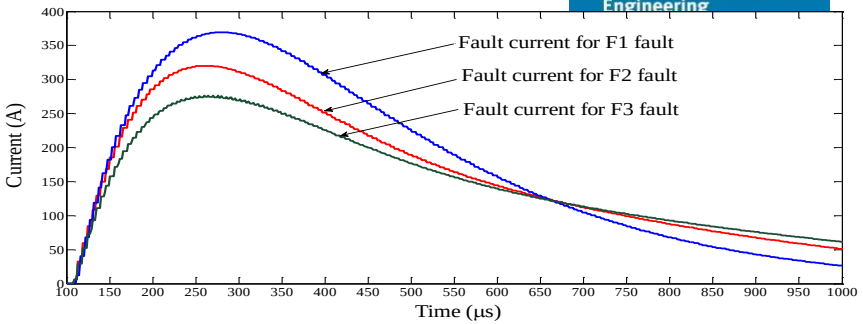

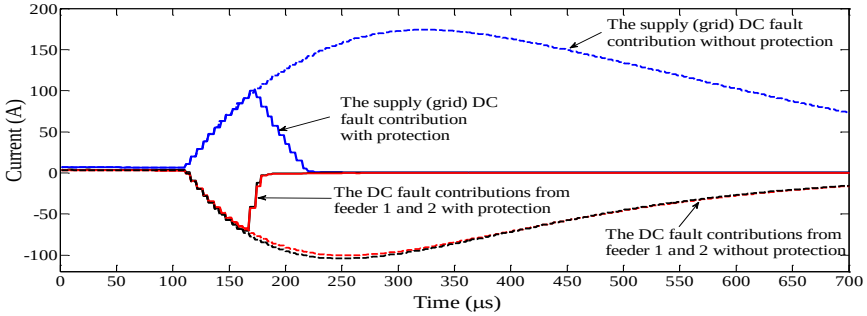

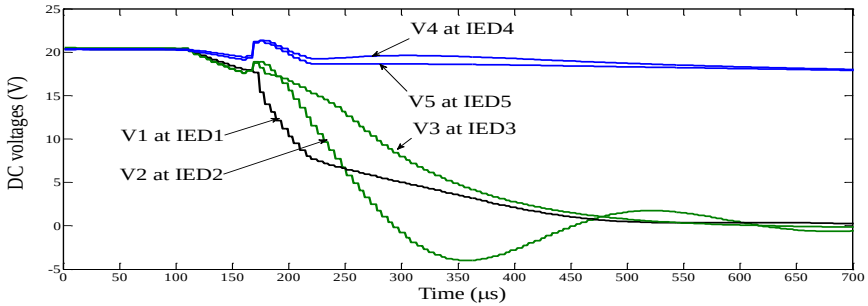

6. Conclusions

- LVDC distribution systems have the potential to bring benefits to future electricity grids
- Replacing or energising an existing part of AC circuits using DC is still at very early stages and limited by practical technical solutions and lack of standards
- The fund to LVDC projects is still limited to national levels
- Protection and safety one of the major concerns
- The developed fast acting DC protection has demonstrated more resilient performance for future LVDC networks

Thank you & Q