arXiv:0806.4561v2 [math.PR] 7 Sep 2010

Moments of exit times from wedges for non-homogeneous random walks with asymptotically zero drifts

Iain M. MacPhee Mikhail V. Menshikov

Department of Mathematical Sciences, Durham University,

South Road, Durham DH1 3LE, UK.

Andrew R. Wade

Department of Mathematics and Statistics, University of Strathclyde,

26 Richmond Street, Glasgow G1 1XH, UK.

8th September 2010

Abstract

We study quantitative asymptotics of planar random walks that are spatially non-homogeneous but whose mean drifts have some regularity. Specifically, we study the first exit time τ_α from a wedge with apex at the origin and interior half-angle α by a non-homogeneous random walk on $\mathbb{Z}^2$ with mean drift at $\mathbf{x}$ of magnitude $O(\|\mathbf{x}\|^{-1})$ as $\|\mathbf{x}\| \to \infty$. This is the critical regime for the asymptotic behaviour: under mild conditions, a previous result of the authors stated that $\tau_\alpha < \infty$ a.s. for any α (while for a stronger drift field τ_α is infinite with positive probability). Here we study the more difficult problem of the existence and non-existence of moments $\mathbb{E}[\tau_\alpha^s]$, $s > 0$. Assuming (in common with much of the literature) a uniform bound on the walk's increments, we show that for $\alpha < \pi/2$ there exists $s_0 \in (0, \infty)$ such that $\mathbb{E}[\tau_\alpha^s]$ is finite for $s < s_0$ but infinite for $s > s_0$; under specific assumptions on the drift field we show that we can attain $\mathbb{E}[\tau_\alpha^s] = \infty$ for any $s > 1/2$. We show that for $\alpha \le \pi$ there is a phase transition between drifts of magnitude $O(\|\mathbf{x}\|^{-1})$ (the *critical* regime) and $o(\|\mathbf{x}\|^{-1})$ (the *subcritical* regime). In the subcritical regime we obtain a non-homogeneous random walk analogue of a theorem for Brownian motion due to Spitzer, under considerably weaker conditions than those previously given (including work by Varopoulos) that assumed zero drift.

Key words and phrases: Angular asymptotics; non-homogeneous random walk; asymptotically zero perturbation; passage-time moments; exit from cones; Lyapunov functions.

AMS 2000 Mathematics Subject Classification: 60J10 (Primary) 60G40, 60G50 (Secondary)

1 Introduction

By a random walk on $\mathbb{R}^d$ ($d \geq 2$) we mean a discrete-time time-homogeneous Markov process on $\mathbb{R}^d$. If such a random walk is spatially homogeneous, its position can be expressed as a sum of i.i.d. random vectors; such homogeneous random walks are classical and have been extensively studied, particularly when the state-space is $\mathbb{Z}^d$: see for example [16, 23]. The most subtle case is that of zero drift, i.e., when the increments have mean zero.

Spatial homogeneity, while simplifying the mathematical analysis, is not always realistic for applications. Thus it is desirable to study *non-homogeneous* random walks. As soon as the spatial homogeneity assumption is relaxed, the situation becomes much more complicated. Even in the zero-drift case, a non-homogeneous random walk can behave completely differently to a zero-drift homogeneous random walk, and can be transient in two dimensions, for instance. This potentially wild behaviour means that techniques from the study of homogeneous random walks are difficult to apply.

In this paper we continue the study of *angular asymptotics*, i.e., exit-from-cones problems, for non-homogeneous random walks that was started in [17]. In [17] it was shown that, in contrast to recurrence/transience behaviour, the angular properties of non-homogeneous random walks are remarkably stable in some sense (as we describe later). We give more evidence to this effect in the present paper.

We study non-homogeneous random walks with *asymptotically zero* mean-drift, that is, the magnitude of the mean drift at $\mathbf{x} \in \mathbb{R}^d$ tends to 0 as $\|\mathbf{x}\| \to \infty$. This is the natural model in which to search for phase transitions in asymptotic behaviour, as can be seen by analogy with the one-dimensional problems considered by Lamperti [13, 14], for instance.

Before formally defining our model and stating our theorems, we informally describe existing results, the results in the present paper, and their significance. In [17], we studied the exit time τ_α from a cone with interior half-angle α for a non-homogeneous random walk on $\mathbb{Z}^d$. For a zero-drift, *homogeneous* random walk, it is a classical result that $\tau_\alpha < \infty$ a.s. for any α, and tail asymptotics for τ_α are known by comparison to a result of Spitzer [22] for Brownian motion or by results of Varopoulos [24, 25]. Our primary interest is how the situation changes when the walk is allowed to be non-homogeneous, and in particular, to quantify the effect of introducing an asymptotically small mean drift.

We will use $\mu(\mathbf{x})$ to denote the one-step mean drift vector of the walk at $\mathbf{x}$. Unlike other asymptotic properties of random walk, it was shown in [17, Theorem 2.1] that the a.s.-finiteness of τ_α remains valid for non-homogeneous random walks *provided* $\|\mu(\mathbf{x})\| = O(\|\mathbf{x}\|^{-1})$ as $\|\mathbf{x}\| \to \infty$, under mild assumptions. In contrast, such a random walk can be positive-recurrent, null-recurrent, or transient: see e.g. results of Lamperti [13, 14]. On the other hand, it was shown in [17, Theorem 2.2] that a mean drift of magnitude $\|\mathbf{x}\|^{-\beta}$, $\beta \in (0, 1)$, can ensure that the walk eventually remains in an arbitrarily narrow cone: indeed, under mild conditions the walk is transient with a limiting direction and a super-diffusive rate of escape [20, §3.2]. These facts motivate the following terminology. If $\|\mu(\mathbf{x})\|$ is of magnitude (i) $o(\|\mathbf{x}\|^{-1})$; (ii) $\|\mathbf{x}\|^{-1}$; (iii) $\|\mathbf{x}\|^{-\beta}$, $\beta \in (0, 1)$ we say that Ξ is in the (i) *subcritical*; (ii) *critical*; (iii) *supercritical* regime, respectively.

The present paper is concerned with the critical and subcritical regimes. Here we know from [17] that $\tau_\alpha < \infty$ a.s., but in the present paper we are concerned with more detailed information about the random variable τ_α: in particular, its *tails* (which moments do or do

not exist). Thus the present paper is concerned with *quantitative* information to complement the qualitative results of [17].

There are two main themes of the present paper. First, we show that provided that $\|\mu(\mathbf{x})\| = O(\|\mathbf{x}\|^{-1})$, τ_α has a *polynomial* tail, i.e., $\mathbb{E}[\tau_\alpha^s]$ is finite for $s > 0$ small enough but infinite for $s > 0$ large enough. Second, we demonstrate a *phase transition* in the tail behaviour of τ_α between the critical and subcritical regimes. Our main result on the subcritical regime will be that not only does the property $\tau_\alpha < \infty$ a.s. carry across from the homogeneous zero-drift case, but also that finer information on the moments of τ_α also remains valid, under mild additional conditions. On the other hand, we give results that show that the critical case is genuinely different: there is a quantitative phase transition in the characteristics of τ_α between the critical and sub-critical regimes.

Studying the moments of τ_α is much more difficult than determining whether τ_α is a.s. finite, so in the present paper we have to impose stronger conditions on the random walk than those in [17]. In particular, to ease technical difficulties we impose a uniform bound on the increments of the walk (as opposed to the 2nd moment bound used in [17]). The bounded increments assumption, although relatively strong, is prevalent in the non-homogeneous random walk literature: see e.g. [15, 21, 24]. Moreover, we restrict to two dimensions (in [17] the walk lived on $\mathbb{Z}^d$, $d \geq 2$). As well as again reducing technicalities, using $\mathbb{Z}^2$ enables us to present our results as clearly as possible since even the Brownian motion case becomes rather involved in higher dimensions [3, 5]. We do not, however, need to assume any symmetry for the increments (as required, for example, in [15, 21]).

Before describing in detail our main results, we briefly survey some relevant literature. In the homogeneous zero-drift setting, for the analogous continuous problem of planar Brownian motion in a wedge, a classical result of Spitzer [22, Theorem 2] says that $\mathbb{E}[\tau_\alpha^p] < \infty$ if and only if $p < \pi/(4\alpha)$. A deep study of passage-time moments for Brownian motion in $\mathbb{R}^d$ was carried out by Burkholder [3]. The random walk problem has received less attention, even in the homogeneous zero-drift case. Varopoulos [24, 25] studied, using potential-theoretic methods, tails of passage-times for zero-drift random walks satisfying various conditions including bounded increments and isotropic covariance; some of the results of [24, 25] allow the walk to be spatially inhomogeneous (at the expense of additional technical conditions, stronger than ours), but all require zero drift. From [24, 25] one can obtain a version of Spitzer's theorem for Brownian motion in the case of zero-drift random walks satisfying appropriate regularity conditions. Exit times from cones for homogeneous random walks are also considered in [10]. Other relevant results specialize to the quarter-lattice $\mathbb{Z}^+ \times \mathbb{Z}^+$ [4, 12] or the hitting-time of a half-line [9, 16]. Certain non-homogeneous random walks with *linear* rate of escape were studied in [8].

A consequence of our results in the present paper is that Spitzer's theorem for Brownian motion essentially extends, under some moderate regularity conditions, to non-homogeneous random walks with mean drifts that tend to zero as $o(\|\mathbf{x}\|^{-1})$. This considerably broadens the spectrum of random walks for which a Spitzer-type result is known; crucially, previous work has considered only the zero-drift case [24, 25].

We briefly comment on the techniques that we use in the present paper. Often it is possible to prove the existence of passage-time moments directly via semimartingale (Lyapunov-type) criteria such as those in [1, 14] in the vein of Foster [7]. In the subcritical case for our non-homogeneous random walk, we have Lyapunov functions that are well-adapted to do

this. In the critical case, the non-homogeneity forces us to adopt a more direct approach, where nevertheless martingale ideas are central. The situation is similar for the problem of non-existence of moments, although even in the subcritical case rather delicate technical estimates are required.

In the next section we formally define our model and state our main results. We also mention some possible directions for future research.

2 Results and discussion

We work in the plane $\mathbb{R}^2$; $\mathbf{e}_1, \mathbf{e}_2$ denote the standard orthonormal basis vectors and $\|\cdot\|$ the Euclidean norm. For $\mathbf{x} \in \mathbb{R}^2$ we write $\mathbf{x} = (x_1, x_2)$ where $x_i = \mathbf{x} \cdot \mathbf{e}_i$. Let $\mathbf{0} = (0,0)$ denote the origin. Our random walk will be $\Xi = (\xi_t)_{t \in \mathbb{Z}^+}$, a Markov process whose state-space is an unbounded subset $\mathcal{S}$ of $\mathbb{Z}^2$.

To ensure that the walk cannot become trapped in lower-dimensional subspaces or finite sets, we will assume the following weak isotropy condition:

(A1) There exist $\kappa > 0$, $k \in \mathbb{N}$ and $n_0 \in \mathbb{N}$ such that

$$\min_{\mathbf{x} \in \mathcal{S};\ \mathbf{y} \in \{\pm k\mathbf{e}_1, \pm k\mathbf{e}_2\}} \mathbb{P}[\xi_{t+n_0} - \xi_t = \mathbf{y} \mid \xi_t = \mathbf{x}] \geq \kappa \quad (t \in \mathbb{Z}^+).$$

Note that (A1) is weaker than 'uniform ellipticity' such as is often assumed in the non-homogeneous random walk or random walk in random environment literature (see e.g. [15, 21]); for a discussion of the strength and implications of (A1), see [17].

Let $\theta_t := \xi_{t+1} - \xi_t$ denote the jump of Ξ at time $t \in \mathbb{Z}^+$. Since Ξ is time-homogeneous and Markovian, the distribution of the random vector θ_t depends only upon the location $\xi_t \in \mathcal{S}$ at time t. In other words, there exists a $\mathbb{Z}^2$-valued random field $\theta = (\theta(\mathbf{x}))_{\mathbf{x} \in \mathcal{S}}$ such that for all $t \in \mathbb{Z}^+$,

$$\mathcal{L}(\xi_{t+1} - \xi_t \mid \xi_t) = \mathcal{L}(\theta_t \mid \xi_t) = \mathcal{L}(\theta(\xi_t)),$$

where $\mathcal{L}$ stands for 'law'. The law of θ is the *jump distribution* of Ξ. We write $\theta(\mathbf{x})$ in components as $(\theta_1(\mathbf{x}), \theta_2(\mathbf{x}))$.

Our second regularity condition is an assumption of uniformly *bounded jumps*:

(A2) There exists $b \in (0, \infty)$ such that $\mathbb{P}[\|\theta(\mathbf{x})\| > b] = 0$ for all $\mathbf{x} \in \mathcal{S}$.

It is likely that, as in [17], this condition could be replaced by a moment assumption at the expense of some technical work, but the assumption (A2) is frequently adopted in the literature: see e.g. [15, 21, 24].

Under (A2), the moments of θ_t are well-defined. Denote the one-step *mean drift* vector

$$\mu(\mathbf{x}) := \mathbb{E}[\theta_t \mid \xi_t = \mathbf{x}] = \mathbb{E}[\theta(\mathbf{x})],$$

for $\mathbf{x} \in \mathcal{S}$, and write $\mu(\mathbf{x}) = (\mu_1(\mathbf{x}), \mu_2(\mathbf{x}))$ in components. We are interested in the case of *asymptotically zero* mean drift, i.e., $\lim_{\|\mathbf{x}\| \to \infty} \|\mu(\mathbf{x})\| = 0$.

For $\alpha \in (0, \pi)$, we denote by $\mathcal{W}(\alpha)$ the (open) wedge with apex at $\mathbf{0}$, principal axis in the $\mathbf{e}_1$ direction, and interior half-angle α:

$$\mathcal{W}(\alpha) := \{\mathbf{x} \in \mathbb{R}^d : \mathbf{e}_1 \cdot \mathbf{x} > \|\mathbf{x}\| \cos \alpha\}.$$

Thus $\mathcal{W}(\pi/4) = \{(x_1, x_2) : x_1 > 0, |x_2| < x_1\}$ is a quadrant and $\mathcal{W}(\pi/2) = \{(x_1, x_2) : x_1 > 0\}$ a half-plane. The case $\alpha = \pi$ we will treat slightly differently: for $s \geq 0$, define

$$\mathcal{H}_s := \{(x_1, x_2) : x_1 \leq 0, |x_2| \leq s\};$$

for $s > 0$ this is a thickened half-line. Then with $b > 0$ the jump bound in (A2), set $\mathcal{W}(\pi) := \mathbb{R}^2 \setminus \mathcal{H}_b$. (For convenience, we often call $\mathcal{W}(\pi)$ a 'wedge' also.) It will also be convenient to set $\mathcal{W}(\alpha) := \mathbb{R}^2$ for any $\alpha > \pi$.

Our primary quantity is the random walk's first exit time from the wedge $\mathcal{W}(\alpha)$. With the usual convention that $\min \emptyset := \infty$, define

$$\tau_\alpha := \min\{t \in \mathbb{Z}^+ : \xi_t \notin \mathcal{W}(\alpha)\}. \tag{2.1}$$

The following fundamental result says that as soon as the mean drift decays fast enough, τ_α is a.s. finite. Theorem 2.1 is essentially contained in [17]: indeed, [17, Theorem 2.1] gives such a result under conditions much weaker than (A2) and in general dimensions $d \geq 2$, but not including the case $\alpha = \pi$ (hitting the thickened half-line). We will give a self-contained proof of Theorem 2.1 that requires minimal extra work on top of that to obtain the main results of the present paper.

Theorem 2.1 *Suppose that (A1) and (A2) hold, and that for $\mathbf{x} \in \mathcal{S}$ as $\|\mathbf{x}\| \to \infty$,*

$$\|\mu(\mathbf{x})\| = O(\|\mathbf{x}\|^{-1}). \tag{2.2}$$

Then for any $\alpha \in (0, \pi]$ and any $\mathbf{x} \in \mathcal{W}(\alpha)$, $\mathbb{P}[\tau_\alpha < \infty \mid \xi_0 = \mathbf{x}] = 1$.

Our first substantially new result, Theorem 2.2, gives information on the tails of τ_α, $\alpha < \pi/2$. In particular, it shows that even for this non-homogeneous walk, the tail behaviour is essentially polynomial in character, as in the zero-drift case: compare Theorem 2.4 below. However, the 'heaviness' of the tail (i.e., the exponent s_0 in the statement of Theorem 2.2) will depend on the details of the walk: compare Theorems 2.3 and 2.4 below. For a one-dimensional analogue of this result, see the Appendix in [1].

Theorem 2.2 *Suppose that (A1) and (A2) hold, $\alpha \in (0, \pi/2)$, and that for $\mathbf{x} \in \mathcal{S}$, (2.2) holds as $\|\mathbf{x}\| \to \infty$. Then there exist $s_0, A \in (0, \infty)$ such that:*

(i) if $s < s_0$, then $\mathbb{E}[\tau_\alpha^s \mid \xi_0 = \mathbf{x}] < \infty$ for any $\mathbf{x} \in \mathcal{W}(\alpha)$;

(ii) if $s > s_0$, then $\mathbb{E}[\tau_\alpha^s \mid \xi_0 = \mathbf{x}] = \infty$ for any $\mathbf{x} \in \mathcal{W}(\alpha)$ with $\|\mathbf{x}\| \geq A$.

Remarks. (a) It is an open problem to show that Theorem 2.2 holds for $\alpha \geq \pi/2$.
(b) Theorem 2.2(ii) cannot be strengthened to *all* $\mathbf{x} \in \mathcal{W}(\alpha)$ without stronger regularity conditions on the walk Ξ. Indeed, under (A1), it may be that for ξ_t close to the boundary of $\mathcal{W}(\alpha)$, ξ_{t+1} is outside $\mathcal{W}(\alpha)$ with probability 1; however, this cannot occur for $\|\xi_t\|$ large enough by our asymptotically zero drift assumption: see Lemma 4.9 below. The same remark applies to our other non-existence of moments results that follow.

Walks satisfying Theorem 2.2 can have radically different characteristics. For example, for small enough wedges a zero-drift walk will have $\mathbb{E}[\tau_\alpha] < \infty$ (see Theorem 2.4 below). On the other hand, the next result implies that for any $\alpha \in (0, \pi/2)$, for a suitably strong $O(\|\mathbf{x}\|^{-1})$ drift field, $\mathbb{E}[\tau_\alpha] = \infty$. In fact, Theorem 2.3 says that for any $\varepsilon > 0$, there exist walks satisfying the conditions of Theorem 2.2 for which $(1/2) + \varepsilon$ moments of τ_α do not exit. An open question is to determine whether $(1/2) - \varepsilon$ moments can be infinite under the conditions of Theorem 2.2.

We take the random walk to have dominant drift in the principal direction. Specifically, we assume that there exists $c > 0$ for which

$$\liminf_{\|\mathbf{x}\|\to\infty}(\|\mathbf{x}\|\mu_1(\mathbf{x})) \geq c, \qquad \lim_{\|\mathbf{x}\|\to\infty}(\|\mathbf{x}\|\mu_2(\mathbf{x})) = 0. \tag{2.3}$$

Theorem 2.3 *Suppose that (A1) and (A2) hold, and $\alpha \in (0, \pi/2)$. Then for any $s > 0$, there exist $c_0, A \in (0, \infty)$ such that if (2.3) holds for any $c > c_0$, then for all $\mathbf{x} \in \mathcal{W}(\alpha)$ with $\|\mathbf{x}\| \geq A$, $\mathbb{E}[\tau_\alpha^{(1/2)+s} \mid \xi_0 = \mathbf{x}] = \infty$.*

Our final result, Theorem 2.4, gives sharp tail asymptotics for τ_α in the *subcritical* regime. To obtain such a sharp result, we need to assume additional regularity for Ξ: specifically, we need to control the covariance structure of the increments of the walk. Denote the covariance matrices $\mathbf{M} = (M_{ij})_{i,j\in\{1,2\}}$ of θ by

$$\mathbf{M}(\mathbf{x}) := \mathbb{E}[\theta_t^\top \theta_t \mid \xi_t = \mathbf{x}] = \mathbb{E}[\theta(\mathbf{x})^\top \theta(\mathbf{x})],$$

for $\mathbf{x} \in \mathcal{S}$, where θ_t is viewed as a row-vector. When (A1) holds, $\mathbb{P}[\xi_{t+1} \neq \mathbf{x} \mid \xi_t = \mathbf{x}]$ is uniformly positive [17, p. 4] so that $M_{11}(\mathbf{x}) + M_{22}(\mathbf{x}) > 0$ uniformly in $\mathbf{x}$.

Theorem 2.4 shows that the critical exponent for the moment problem depends only on α and is the same in this random walk setting as in the Brownian motion case, where the result is due to Spitzer [22, Theorem 2]. In particular, Theorem 2.4 includes the case of a homogeneous random walk with zero drift, where the result follows from [24, Theorem 4] (see also [25]). We write $\mathbf{o}(1)$ for a 2×2 matrix each of whose entries is $o(1)$.

Theorem 2.4 *Suppose that (A1) and (A2) hold, and there exists $\sigma^2 \in (0, \infty)$ such that*

$$\|\mu(\mathbf{x})\| = o(\|\mathbf{x}\|^{-1}), \text{ and } \mathbf{M}(\mathbf{x}) = \sigma^2\mathbf{I} + \mathbf{o}(1), \tag{2.4}$$

as $\|\mathbf{x}\| \to \infty$. Suppose that $\alpha \in (0, \pi]$.

(i) If $s \in [0, \pi/(4\alpha))$ and $\mathbf{x} \in \mathcal{W}(\alpha)$, $\mathbb{E}[\tau_\alpha^s \mid \xi_0 = \mathbf{x}] < \infty$.

(ii) If $s > \pi/(4\alpha)$ and $\mathbf{x} \in \mathcal{W}(\alpha)$ with $\|\mathbf{x}\|$ sufficiently large, $\mathbb{E}[\tau_\alpha^s \mid \xi_0 = \mathbf{x}] = \infty$.

Certain cases of Theorem 2.4 extend results of Klein Haneveld and Pittenger [12] and Lawler [16] for homogeneous zero-drift random walks (i.e., sums of i.i.d. mean-zero random vectors) to non-homogeneous random walks with small drifts. First, for hitting a half-line ($\alpha = \pi$), Theorem 2.4 implies that 1/4-moments are critical, a result obtained for homogeneous zero-drift random walks by Lawler (see (2.35) in [16], also [9]). Second, in the case of a quadrant ($\alpha = \pi/4$), Theorem 2.4(ii) implies that $\mathbb{E}[\tau_{\pi/4}^s] = \infty$ for $s > 1$, a result contained in [12, Theorem 1.1] for a homogeneous zero-drift random walk with certain regularity conditions (see also [4, Theorem 1.1]).

The outline of the rest of the paper is as follows. Section 3 collects some preparatory results. Section 4 is devoted to the critical case and the proofs of Theorems 2.1, 2.2 and 2.3, while Section 5 is devoted to the subcritical case and the proof of Theorem 2.4. The proofs of the existence and non-existence of moments results are largely separate.

3 Preliminaries

3.1 Semimartingale criteria

In this section we collect some general semimartingale-type results that we need. Let $(\mathcal{F}_t)_{t\in\mathbb{Z}^+}$ be a filtration on a probability space $(\Omega, \mathcal{F}, \mathbb{P})$. Let $(Y_t)_{t\in\mathbb{Z}^+}$ be a discrete-time $(\mathcal{F}_t)_{t\in\mathbb{Z}^+}$-adapted stochastic process taking values in $[0, \infty)$. Typically, when we come to apply the following lemmas later on, we will have $Y_t = r(\xi_t)$ for some $r : \mathbb{R}^2 \to [0, \infty)$.

Following work of Lamperti [14], the primary results available for establishing the existence and non-existence of passage-time moments for a (not necessarily Markov) stochastic process are contained in [1]. For some of the applications in the present paper, we could not apply these general results and so have to use other techniques.

The following existence result is contained in Theorem 1 of [1].

Lemma 3.1 *Let $(Y_t)_{t\in\mathbb{Z}^+}$ be an $(\mathcal{F}_t)_{t\in\mathbb{Z}^+}$-adapted stochastic process taking values in an unbounded subset of $[0, \infty)$. For $B > 0$ set $\upsilon_B := \min\{t \in \mathbb{N} : Y_t \le B\}$. Suppose that there exist $C, p_0 \in (0, \infty)$ such that for any $t \in \mathbb{Z}^+$, $Y_t^{2p_0}$ is integrable, and*

$$\mathbb{E}[Y_{t+1}^{2p_0} - Y_t^{2p_0} \mid \mathcal{F}_t] \le -CY_t^{2p_0-2}, \text{ on } \{\upsilon_B > t\}.$$

Then for any $p \in [0, p_0)$, for any x, $\mathbb{E}[\upsilon_B^p \mid Y_0 = x] < \infty$.

The corresponding non-existence result that we will need is Corollary 1 in [1]:

Lemma 3.2 *With the notation of Lemma 3.1, suppose that there exist $C, D, p_0 \in (0, \infty)$ and $r > 1$ such that for any $t \in \mathbb{Z}^+$ the following 3 conditions hold on $\{\upsilon_B > t\}$:*

$$\mathbb{E}[Y_{t+1}^{2p_0} - Y_t^{2p_0} \mid \mathcal{F}_t] \ge 0; \tag{3.1}$$

$$\mathbb{E}[Y_{t+1}^{2} - Y_t^{2} \mid \mathcal{F}_t] \ge -C; \tag{3.2}$$

$$\mathbb{E}[Y_{t+1}^{2r} - Y_t^{2r} \mid \mathcal{F}_t] \le DY_t^{2r-2}. \tag{3.3}$$

Then for any $p > p_0$, for any x large enough, $\mathbb{E}[\upsilon_B^p \mid Y_0 = x] = \infty$.

3.2 Lyapunov functions

In this section we introduce some Lyapunov functions that we will use to study our random walk in the subcritical case, and analyze their basic properties. These functions will be built upon standard harmonic functions in the plane, as were employed by Burkholder [3] in his sharp analysis of the exit-from-cones problem for Brownian motion; it is natural that they are the correct tools when our random walk is sufficiently close to zero-drift. We need some more notation.

For $\mathbf{x} = (x_1, x_2) \in \mathbb{R}^2$ we use polar coordinates (r, φ) relative to the ray Γ_0 in the $\mathbf{e}_1$ direction starting at $\mathbf{0}$. Thus if $r = \|\mathbf{x}\|$ and $\varphi \in (-\pi, \pi]$ is the angle, measuring anticlockwise, of the ray through $\mathbf{0}$ and $\mathbf{x} = (x_1, x_2)$ from the ray Γ_0, we have $x_1 = r\cos\varphi$ and $x_2 = r\sin\varphi$. We occasionally write φ as $\varphi(\mathbf{x})$ for clarity. Let $\mathbf{e}_r(\varphi) = \mathbf{e}_1\cos\varphi + \mathbf{e}_2\sin\varphi$, the radial unit vector, and $\mathbf{e}_\perp(\varphi) = -\mathbf{e}_1\sin\varphi + \mathbf{e}_2\cos\varphi$, the transverse unit vector. Note that in polar coordinates, $\mathcal{W}(\alpha) = \{\mathbf{x} \in \mathbb{R}^2 : r > 0, -\alpha < \varphi < \alpha\}$.

Let $B_r(\mathbf{x})$ denote the closed Euclidean ball (a disk) of radius r centred at $\mathbf{x} \in \mathbb{R}^2$. For $\alpha \in (0, \pi]$ and $s \geq 0$ define the modified wedge

$$\mathcal{W}_s(\alpha) := \mathcal{W}(\alpha) \setminus B_s(\mathbf{0}) = \{\mathbf{x} \in \mathcal{W}(\alpha) : \|\mathbf{x}\| > s\},$$

which is $\mathcal{W}(\alpha)$ with a disk-segment around the origin removed. During our proofs, we will often work with the exit time from the locally modified set $\mathcal{W}_A(\alpha)$ for some fixed (large) value of $A > 0$. Let $\mathcal{W}_0(\alpha) := \mathcal{W}(\alpha)$ and for $A \geq 0$, define

$$\tau_{\alpha,A} := \min\{t \in \mathbb{Z}^+ : \xi_t \notin \mathcal{W}_A(\alpha)\}. \tag{3.4}$$

Then $\tau_{\alpha,A} \geq \tau_{\alpha,B}$ for $B \geq A$, and $\tau_{\alpha,0} = \tau_\alpha$ with the notation of (2.1).

We will use multi-index notation for partial derivatives on $\mathbb{R}^2$. For $\sigma = (\sigma_1, \sigma_2) \in \mathbb{Z}^+ \times \mathbb{Z}^+$, $D_\sigma = D_{\sigma_1\sigma_2}$ will denote $D_1^{\sigma_1} D_2^{\sigma_2}$ where D_j^k for $k \in \mathbb{N}$ is k-fold differentiation with respect to x_j, and D_j^0 is the identity operator. We also use the notation $|\sigma| := \sigma_1 + \sigma_2$ and $\mathbf{x}^\sigma := x_1^{\sigma_1} x_2^{\sigma_2}$.

For $w > 0$, define the function $f_w : \mathbb{R}^2 \to \mathbb{R}$ by

$$f_w(\mathbf{x}) := f_w(r, \varphi) := r^w \cos(w\varphi). \tag{3.5}$$

Differentiating, using the appropriate from of the chain rule, shows that for any $w > 0$,

$$D_1 f_w(r, \varphi) = w r^{w-1}\cos((w-1)\varphi); \quad D_2 f_w(r, \varphi) = -w r^{w-1}\sin((w-1)\varphi), \tag{3.6}$$

$$\text{and} \quad D_1 D_2 f_w(r, \varphi) = D_2 D_1 f_w(r, \varphi) = w(w-1) r^{w-2}\sin((w-2)\varphi). \tag{3.7}$$

Moreover, f_w is harmonic on $\mathbb{R}^2$, since

$$D_1^2 f_w(r, \varphi) = w(w-1) r^{w-2}\cos((w-2)\varphi) = -D_2^2 f_w(r, \varphi). \tag{3.8}$$

For $w > 1/2$, f_w is positive in the interior of the wedge $\mathcal{W}(\pi/(2w))$, and 0 on the boundary $\partial\mathcal{W}(\pi/(2w))$; $f_{1/2}$ is positive on $\mathbb{R}^2 \setminus \mathcal{H}_0$ and zero on the half-line $\mathcal{H}_0$. For $w \in (0, 1/2)$, f_w is positive throughout $\mathbb{R}^2$. As an example, the harmonic function

$$f_2(\mathbf{x}) = r^2\cos(2\varphi) = x_1^2 - x_2^2 \tag{3.9}$$

is positive on the quadrant $\mathcal{W}(\pi/4)$ and zero on $\partial\mathcal{W}(\pi/4)$.

It follows by repeated applications of the chain rule that f_w and all of its derivatives $D_\sigma f_w$ are of the form $r^k u(\varphi)$ where u is bounded, and hence for any σ with $|\sigma| = j$ there exists a constant $C \in (0,\infty)$ such that for all $\mathbf{x} \in \mathbb{R}^2$,

$$-Cr^{w-j} < D_\sigma f_w(\mathbf{x}) < Cr^{w-j}. \tag{3.10}$$

The next result gives expressions for the first three moments of the jumps of $f_w(\xi_t)$.

Lemma 3.3 *Suppose that (A2) holds. Then with f_w defined at (3.5), for $w > 0$, there exists $C \in (0,\infty)$ such that for any $\mathbf{x} \in \mathcal{S}$,*

$$\mathbb{P}[|f_w(\xi_{t+1}) - f_w(\xi_t)| \le C(1 + \|\mathbf{x}\|)^{w-1} \mid \xi_t = \mathbf{x}] = 1. \tag{3.11}$$

Also, for any $\mathbf{x} \in \mathcal{S}$ as $r = \|\mathbf{x}\| \to \infty$, we have the following asymptotic expansions:

$$\begin{aligned}
\mathbb{E}[f_w(\xi_{t+1}) - f_w(\xi_t) \mid \xi_t = \mathbf{x}] &= wr^{w-1}\left(\mu_1(\mathbf{x})\cos((w-1)\varphi) - \mu_2(\mathbf{x})\sin((w-1)\varphi)\right) \\
&\quad + \frac{1}{2}\left(M_{11}(\mathbf{x}) - M_{22}(\mathbf{x})\right) w(w-1)r^{w-2}\cos((w-2)\varphi) \\
&\quad + M_{12}(\mathbf{x})w(w-1)r^{w-2}\sin((w-2)\varphi) + O(r^{w-3}); \qquad (3.12)\\
\mathbb{E}[(f_w(\xi_{t+1}) - f_w(\xi_t))^2 \mid \xi_t = \mathbf{x}] &= w^2 r^{2w-2}\left(M_{11}(\mathbf{x})\cos^2((w-1)\varphi) + M_{22}(\mathbf{x})\sin^2((w-1)\varphi)\right) \\
&\quad - M_{12}(\mathbf{x})w^2 r^{2w-2}\sin(2(w-1)\varphi) + O(r^{2w-3}); \qquad (3.13)\\
\mathbb{E}[(f_w(\xi_{t+1}) - f_w(\xi_t))^3 \mid \xi_t = \mathbf{x}] &= O(r^{3w-3}). \qquad (3.14)
\end{aligned}$$

Proof. Since f_w is smooth, Taylor's theorem with Cartesian coordinates and the Lagrange form for the remainder applied in a disk of radius b at any $\mathbf{x} \in \mathbb{R}^2$ implies

$$f_w(\mathbf{x} + \mathbf{y}) = f_w(\mathbf{x}) + \sum_j y_j (D_j f_w)(\mathbf{x} + \eta\mathbf{y}),$$

for some $\eta = \eta(\mathbf{y}) \in (0,1)$, for any $\mathbf{y} = (y_1, y_2)$ with $\|\mathbf{y}\| \le b$. Taking $\mathbf{y} = \xi_{t+1} - \xi_t = \theta_t$, conditioning on $\xi_t = \mathbf{x}$, we then obtain, with (3.6), a.s., for some $C \in (0,\infty)$,

$$|f_w(\xi_{t+1}) - f_w(\xi_t)| \le C\|\mathbf{x} + \eta\theta(\mathbf{x})\|^{w-1},$$

for any $\mathbf{y} \in \mathbb{Z}^2$. Now (A2) implies (3.11).

For the moment estimates, we include more terms in the Taylor expansion to obtain

$$\begin{aligned}
\mathbb{E}[f_w(\xi_{t+1}) - f_w(\xi_t) \mid \xi_t = \mathbf{x}] &= \sum_j \mathbb{E}[\theta_j(\mathbf{x})](D_j f_w)(\mathbf{x}) + \frac{1}{2}\sum_j \mathbb{E}[\theta_j(\mathbf{x})^2](D_j^2 f_w)(\mathbf{x}) \\
&\quad + \sum_{i<j} \mathbb{E}[\theta_i(\mathbf{x})\theta_j(\mathbf{x})](D_i D_j f_w)(\mathbf{x}) + \frac{1}{6}\mathbb{E}\left[\sum_{\sigma:|\sigma|=3} \theta^\sigma(\mathbf{x})(D_\sigma f_w)(\mathbf{x} + \eta\theta(\mathbf{x}))\right], \qquad (3.15)
\end{aligned}$$

for some $\eta = \eta(\theta_t) \in (0,1)$. By (A2), $\mathbb{E}[\theta_j(\mathbf{x})^3] = O(1)$, so that using (3.10) the final term in (3.15) is $O(r^{w-3})$. Then using (3.6), (3.7) and (3.8) in (3.15), we obtain (3.12).

In a similar fashion, we obtain (3.13). Specifically,

$$\mathbb{E}[(f_w(\xi_{t+1}) - f_w(\xi_t))^2 \mid \xi_t = \mathbf{x}] = \sum_j \mathbb{E}[\theta_j(\mathbf{x})^2]((D_j f_w)(\mathbf{x}))^2$$
$$+ 2\sum_{i<j} \mathbb{E}[\theta_i(\mathbf{x})\theta_j(\mathbf{x})](D_i f_w)(\mathbf{x})(D_j f_w)(\mathbf{x}) + O(r^{2w-3}),$$

using (A2), and (3.13) follows using (3.6). Finally,

$$\mathbb{E}[(f_w(\xi_{t+1}) - f_w(\xi_t))^3 \mid \xi_t = \mathbf{x}] = \sum_j \mathbb{E}[\theta_j(\mathbf{x})^3]((D_j f_w)(\mathbf{x}))^3 + O(r^{3w-4}),$$

and by (A2), $\mathbb{E}[\theta_j(\mathbf{x})^3] = O(1)$. Then (3.14) follows from (3.6). □

When Ξ has zero drift, one expects that $(f_w(\xi_t))_{t\in\mathbb{Z}^+}$ is 'almost' a martingale, keeping the Brownian analogy in mind [3]. Thus the process $(f_w(\xi_t))_{t\in\mathbb{Z}^+}$ will be useful when $\|\mu(\mathbf{x})\| = o(\|\mathbf{x}\|^{-1})$. In order to apply the semimartingale criteria of Section 3.1, we often want to modify our process $(f_w(\xi_t))_{t\in\mathbb{Z}^+}$, to obtain either a submartingale or a supermartingale. So, in Lemma 3.5 below, we study the process $(f_w(\xi_t)^\gamma)_{t\in\mathbb{Z}^+}$ where $\gamma \in \mathbb{R}$. Recall that for $w < \pi/(2\alpha)$, $f_w(\mathbf{x})$ is positive on a wedge $\mathcal{W}(\pi/(2w))$ bigger than $\mathcal{W}(\alpha)$. The following result is simple but important.

Lemma 3.4 *Suppose that $\alpha \in (0,\pi]$ and $w \in (0,\pi/(2\alpha))$. Then there exists $\varepsilon_{\alpha,w} = \cos(w\alpha) > 0$ such that for all $\mathbf{x} \in \mathcal{W}(\alpha)$,*

$$\varepsilon_{\alpha,w} r^w \le f_w(\mathbf{x}) \le r^w. \tag{3.16}$$

Moreover, for $k \ge 0$ we have that if $w \ge k/2$ then for all $\mathbf{x} \in \mathcal{W}(\alpha)$,

$$\cos((w-k)\varphi) \ge \varepsilon_{\alpha,w} > 0. \tag{3.17}$$

Proof. For fixed $\alpha \in (0,\pi]$ and fixed $w \in (0,\pi/(2\alpha))$ we have

$$\varepsilon_{\alpha,w} := \inf_{\mathbf{x}\in\mathcal{W}(\alpha)} \cos(w\varphi) = \inf_{\varphi\in(-\alpha,\alpha)} \cos(w\varphi) = \cos(w\alpha) > 0,$$

since $w\alpha \in (0,\pi/2)$. Then (3.16) follows from (3.5). The statement (3.17) follows similarly, using the fact that for $w \ge k/2$ and $k \ge 0$, $-w \le -k/2 \le w-k \le w$, so

$$\inf_{\mathbf{x}\in\mathcal{W}(\alpha)} \cos((w-k)\varphi) \ge \inf_{\varphi\in(-\alpha,\alpha)} \cos(w\varphi) = \varepsilon_{\alpha,w}.$$

This completes the proof. □

Lemma 3.5 *Suppose that (A2) holds. Suppose that $\alpha \in (0,\pi]$, $\gamma \in \mathbb{R}$, and $w \in (0,\pi/(2\alpha))$. Then for all $\mathbf{x} \in \mathcal{W}(\alpha)$ we have that as $r = \|\mathbf{x}\| \to \infty$,*

$$\begin{aligned}&\mathbb{E}[f_w(\xi_{t+1})^\gamma - f_w(\xi_t)^\gamma \mid \xi_t = \mathbf{x}]\\ &= \gamma f_w(\mathbf{x})^{\gamma-1} w r^{w-1} \left(\mu_1(\mathbf{x})\cos((w-1)\varphi) - \mu_2(\mathbf{x})\sin((w-1)\varphi)\right)\end{aligned}$$

$$
\begin{aligned}
&+ \gamma f_w(\mathbf{x})^{\gamma-1} M_{12}(\mathbf{x}) w(w-1) r^{w-2} \sin((w-2)\varphi) \\
&+ \frac{1}{2}\gamma f_w(\mathbf{x})^{\gamma-1} \left(M_{11}(\mathbf{x}) - M_{22}(\mathbf{x})\right) w(w-1) r^{w-2} \cos((w-2)\varphi) \\
&+ \frac{1}{2}\gamma(\gamma-1) f_w(\mathbf{x})^{\gamma-2} w^2 r^{2w-2} \left(M_{11}(\mathbf{x}) \cos^2((w-1)\varphi) + M_{22}(\mathbf{x}) \sin^2((w-1)\varphi)\right) \\
&- \frac{1}{2}\gamma(\gamma-1) f_w(\mathbf{x})^{\gamma-2} w^2 r^{2w-2} M_{12}(\mathbf{x}) \sin(2(w-1)\varphi) + O(f_w(\mathbf{x})^{\gamma-3} r^{3w-3}).
\end{aligned}
$$

Proof. Let $\Delta := f_w(\xi_{t+1}) - f_w(\xi_t)$. Then for $\gamma \in \mathbb{R}$ and $\mathbf{x} \in \mathcal{W}(\alpha)$,

$$
\mathbb{E}[f_w(\xi_{t+1})^\gamma - f_w(\xi_t)^\gamma \mid \xi_t = \mathbf{x}] = f_w(\mathbf{x})^\gamma \mathbb{E}\left[\left(1 + \frac{\Delta}{f_w(\mathbf{x})}\right)^\gamma - 1 \;\middle|\; \xi_t = \mathbf{x} \right],
$$

and as long as $\Delta / f_w(\mathbf{x})$ is not too large we can use the fact that for $\gamma \in \mathbb{R}$ and small x

$$
(1+x)^\gamma = 1 + \gamma x + \frac{1}{2}\gamma(\gamma-1)x^2 + O(x^3).
$$

Under the conditions of the lemma, for $\mathbf{x} \in \mathcal{W}(\alpha)$ with $r = \|\mathbf{x}\|$ large enough, a.s.,

$$
\left| \frac{\Delta}{f_w(\mathbf{x})} \right| \le \frac{C r^{w-1}}{f_w(\mathbf{x})} = O(r^{-1}),
$$

using (3.11) and (3.16). Hence for $\gamma \in \mathbb{R}$ and all $\|\mathbf{x}\|$ large enough

$$
\begin{aligned}
\mathbb{E}[f_w(\xi_{t+1})^\gamma - f_w(\xi_t)^\gamma \mid \xi_t = \mathbf{x}] &= \gamma f_w(\mathbf{x})^{\gamma-1} \mathbb{E}[\Delta \mid \xi_t = \mathbf{x}] \\
&+ \frac{1}{2}\gamma(\gamma-1) f_w(\mathbf{x})^{\gamma-2} \mathbb{E}[\Delta^2 \mid \xi_t = \mathbf{x}] + O\left(f_w(\mathbf{x})^{\gamma-3} \mathbb{E}[\Delta^3 \mid \xi_t = \mathbf{x}]\right).
\end{aligned} \tag{3.18}
$$

Then from (3.18), Lemma 3.3, and (3.16) we obtain the desired result. □

We will also need the following straightforward result.

Lemma 3.6 *Let $h : \mathbb{R}^2 \to \mathbb{R}$ and $R \subset \mathbb{R}^2$ be such that $h(\mathbf{x}) \le 0$ for all $\mathbf{x} \in \mathbb{R}^2 \setminus R$. Set $\hat{h}(\mathbf{x}) := h(\mathbf{x}) \mathbf{1}_{\{\mathbf{x} \in R\}}$. Then for all $\mathbf{x} \in R$ and all $t \in \mathbb{Z}^+$,*

$$
\hat{h}(\xi_{t+1}) - \hat{h}(\xi_t) \ge h(\xi_{t+1}) - h(\xi_t), \text{ on } \{\xi_t = \mathbf{x}\}.
$$

Proof. For $\mathbf{x} \in R$ we have on $\{\xi_t = \mathbf{x}\}$ that $\hat{h}(\xi_{t+1}) - \hat{h}(\xi_t) = h(\xi_{t+1}) - h(\xi_t) - h(\xi_{t+1}) \mathbf{1}_{\{\xi_{t+1} \notin R\}}$, which yields the result given that $h(\mathbf{x}) \le 0$ for $\mathbf{x} \notin R$. □

4 Critical case: proofs of Theorems 2.1, 2.2, and 2.3

4.1 Overview and statement of upper bound

In this section we prove our main results on moments of τ_α in the critical case, Theorems 2.2 and 2.3, as well as giving a self-contained proof of Theorem 2.1 including the case $\alpha = \pi$ not directly covered by the results of [17]. There are two largely separate components to the

proofs of these three theorems. The existence of moments part of Theorem 2.2, as well as Theorem 2.1, will follow from Lemma 4.1 stated below, which gives an upper bound on the tails of τ_α. We are not able to use the general results such as Lemma 3.1 to prove Lemma 4.1; instead our proof is in some sense more elementary, although we do use semimartingale tools at several points. On the other hand, for the non-existence part of Theorem 2.2, as well as Theorem 2.3, we are able to appeal to the general result Lemma 3.2 after finding and analysing a suitable Lyapunov function. Thus in the second (non-existence) part of the proof the intuition is encapsulated in the Lyapunov function and there is not a natural central lemma to stand alongside Lemma 4.1 in that case.

Here is our central result for the 'existence' part of the proofs.

Lemma 4.1 *Suppose that (A1), (A2), and (2.2) hold. Let $\alpha \in (0, \pi/2)$ and $\mathbf{x} \in \mathcal{W}(\alpha)$. There exist $\gamma \in (0, \infty)$, not depending on $\mathbf{x}$, and $C \in (0, \infty)$, which does depend on $\mathbf{x}$, such that for all $t > 0$,*

$$\mathbb{P}[\tau_\alpha > t \mid \xi_0 = \mathbf{x}] \leq Ct^{-\gamma}. \tag{4.1}$$

Now we describe the outline of the remainder of this section. First, in Section 4.2, we show how Lemma 4.1 gives an almost immediate proof of Theorem 2.1, including the $\alpha = \pi$ case not covered by [17]. Crucial to the proof of Lemma 4.1 will be a *decomposition* of the random walk Ξ based on the regularity condition (A1). In [17, Section 4.2] we used a related decomposition that was, however, different, and in fact more complicated than the one used below, since [17] considers general dimensions. The version of the decomposition in the present paper is described in detail in Section 4.3. Section 4.4 is devoted to a key step in the proof of Lemma 4.1, which is a result on the exit from rectangles (Lemma 4.5 below) that says, loosely speaking, that if the walk starts somewhere near the centre of a rectangle, there is strictly positive probability (uniformly in the size of the rectangle) that the walk will first exit the rectangle via the top/bottom. Here the fact that $\|\mu(\mathbf{x})\| = O(\|\mathbf{x}\|^{-1})$ is crucial. This result clarifies the key difference between the one-dimensional and multi-dimensional settings: see the remark after Lemma 4.5. In Section 4.5 we give the proof of Lemma 4.1. Then we turn to the 'non-existence' parts of the proof; our main tool is a Lyapunov function introduced in Section 4.6. Finally we complete the proofs of Theorems 2.2 and 2.3 in Section 4.7.

4.2 Proof of Theorem 2.1

We establish Theorem 2.1 by studying the behaviour of the walk on a set of seven overlapping quarter-planes that together span $\mathcal{W}(\pi)$ (the plane minus a thickened half-line). For this reason, we need to consider wedges like $\mathcal{W}(\alpha)$ with several different principal axes. This requires some more notation. Define lattice vectors $\mathbf{q}_i$, $i \in \{1, \ldots, 7\}$ by

$$\mathbf{q}_5 = -\mathbf{q}_1 = \mathbf{e}_1 + \mathbf{e}_2, \quad \mathbf{q}_6 = -\mathbf{q}_2 = \mathbf{e}_2, \quad \mathbf{q}_3 = -\mathbf{q}_7 = \mathbf{e}_1 - \mathbf{e}_2, \quad \mathbf{q}_4 = \mathbf{e}_1.$$

We also need notation for perpendiculars to the $\mathbf{q}_i$, specifically

$$\mathbf{q}_i^\perp = \mathbf{q}_{i+2},\ i \in \{1, 2, \ldots, 5\}, \quad \mathbf{q}_6^\perp = -\mathbf{q}_4, \quad \mathbf{q}_7^\perp = \mathbf{q}_1.$$

For the corresponding unit vectors, write $\hat{\mathbf{q}}_i := \|\mathbf{q}_i\|^{-1}\mathbf{q}_i$ and $\hat{\mathbf{q}}_i^\perp := \|\mathbf{q}_i^\perp\|^{-1}\mathbf{q}_i^\perp$; note that $\|\mathbf{q}_i\| = \|\mathbf{q}_i^\perp\|$, which is 1 for even i and $\sqrt{2}$ for odd i.

For $\beta \in (0, \pi/2)$ and $i \in \{1, \ldots, 7\}$ let $W_i(\beta)$ denote the wedge with apex $\mathbf{0}$, internal angle 2β, and principal direction $\mathbf{q}_i$; that is

$$W_i(\beta) := \{\mathbf{x} \in \mathbb{R}^2 : \mathbf{x} \cdot \mathbf{q}_i > 0, |\mathbf{x} \cdot \mathbf{q}_i^\perp| < (\tan\beta)|\mathbf{x} \cdot \mathbf{q}_i|\}. \tag{4.2}$$

With our existing notation, this means that $W_4(\alpha)$ is $\mathcal{W}(\alpha)$; the other $W_i(\alpha)$ are rotations of $\mathcal{W}(\alpha)$ through angles $k\pi/4$, $k \in \{\pm 1, \pm 2, \pm 3\}$. In the proof of Theorem 2.1 below we will need the quarter-planes $W_i(\pi/4)$; when it comes to the proof of Theorem 2.2 we need $W_i(\alpha)$ for $\alpha \in (0, \pi/2)$. Thus we work in this generality for now. For $\beta \in (0, \pi/2)$, let

$$\tau_i(\beta) := \min\{t \in \mathbb{Z}^+ : \xi_t \notin W_i(\beta)\}. \tag{4.3}$$

Proof of Theorem 2.1. It suffices to show that the result holds for $\alpha = \pi$, i.e., the walk a.s. eventually hits the thickened half-line $\mathcal{H}_b$. For notational ease let $Q_i := W_i(\pi/4)$, $\tau_i := \tau_i(\pi/4)$ for $i \in \{1, \ldots, 7\}$. Also write $Q_8 := \mathcal{H}_b$ and $B := B_A(\mathbf{0})$ for some $A \in (0, \infty)$.

Suppose that $\xi_0 \in Q_i$. It follows immediately from Lemma 4.1 that $\mathbb{P}[\tau_i < \infty] = 1$, and so Ξ almost surely exits the initial quadrant Q_i. By the bounded jumps assumption (A2), the definition (4.2), and an appropriate choice of A, we see that at time τ_i, ξ_{τ_i} is either: (i) in Q_8; (ii) in B; or (iii) within distance b of the principal axis of either Q_{i+1} or Q_{i-1}, working mod 8 for the indices of the Q_js.

In case (ii) or (iii), Ξ exits B or the quadrant whose principal axis it is close to in finite time. In the first case, having left B, Ξ is in some quadrant, which it must exit in finite time, again ending up in B or close to the principal axis of some other quadrant. This process repeats, showing that Ξ must, infinitely often, be close to the principal axis of one of the quadrants Q_i. Moreover, at such times, the proof of Lemma 4.3 shows that the events that the walk next visits $Q_{i\pm 1}$ each have uniformly positive probability. It follows that Ξ visits each Q_i eventually, a.s., and in particular hits the thickened half-line. $\square$

4.3 Decomposition

For each i, using the regularity condition (A1) we decompose Ξ into a symmetric walk in the $\mathbf{q}_i^\perp$ direction and a residual walk. For $\mathbf{x}, \mathbf{y} \in \mathbb{Z}^2$, $n \in \mathbb{N}$ and $t \in \mathbb{Z}^+$ let $p(\mathbf{x}, \mathbf{y}; n) := \mathbb{P}[\xi_{t+n} = \mathbf{y} \mid \xi_t = \mathbf{x}]$. It follows from (A1) by considering finite combinations of jumps that for each $i \in \{1, 2, \ldots, 7\}$ there exist constants $\gamma_i \in (0, 1/2)$, $n_i, j_i \in \mathbb{N}$ such that

$$\min_{\mathbf{x} \in Q_i}\{p(\mathbf{x}, \mathbf{x} + j_i\mathbf{q}_i^\perp; n_i), p(\mathbf{x}, \mathbf{x} - j_i\mathbf{q}_i^\perp; n_i)\} \geq \gamma_i. \tag{4.4}$$

Now we fix i and consider the 'n_i-skeleton' random walk, i.e. the embedded process $(\xi_{tn_i})_{t \in \mathbb{Z}^+}$. For notational convenience, for $t \in \mathbb{Z}^+$ write $\xi_t^* := \xi_{tn_i}$. Then $\Xi^* = (\xi_t^*)_{t \in \mathbb{Z}^+}$ is a Markov chain on $\mathcal{S}$ with transition probabilities $\mathbb{P}[\xi_{t+1}^* = \mathbf{y} \mid \xi_t^* = \mathbf{x}] = p(\mathbf{x}, \mathbf{y}; n_i)$, and $\xi_0^* = \xi_0$. The walk Ξ^* inherits regularity from Ξ as described in the following lemma.

Lemma 4.2 *Suppose that (A1) and (A2) hold. Then*

$$\mathbb{P}[\|\xi_{t+1}^* - \xi_t^*\| \leq bn_i] = 1; \text{ and} \tag{4.5}$$

$$\mathbb{E}[|(\xi^*_{t+1} - \xi^*_t) \cdot \hat{\mathbf{q}}_i^\perp|^2 \mid \xi^*_t = \mathbf{x}] \geq 2j_i^2 \|\mathbf{q}_i^\perp\|^2 \gamma_i > 0, \tag{4.6}$$

for all $\mathbf{x} \in \mathcal{S}$*. Moreover, if (2.2) holds, then, for* $\mathbf{x} \in \mathcal{S}$*, as* $\|\mathbf{x}\| \to \infty$*,*

$$\|\mathbb{E}[\xi^*_{t+1} - \xi^*_t \mid \xi^*_t = \mathbf{x}]\| = O(\|\mathbf{x}\|^{-1}). \tag{4.7}$$

Proof. The bound (4.5) is immediate from (A2), while (4.6) follows from (4.4). Moreover, it follows from (A2) that,

$$\max_{tn_i \leq s \leq (t+1)n_i} \|\xi_s - \xi^*_t\| \leq n_i b, \text{ a.s.}, \tag{4.8}$$

which with (2.2) implies (4.7). □

By (4.4), there exist sequences of random variables $(V_t)_{t\in\mathbb{N}}$ and $(\zeta_t)_{t\in\mathbb{N}}$ such that:

(i) the $(V_t)_{t\in\mathbb{N}}$ are i.i.d. with $V_t \in \{-1, 0, 1\}$, $\mathbb{P}[V_t = 0] = 1 - 2\gamma_i$, and $\mathbb{P}[V_t = -1] = \mathbb{P}[V_t = +1] = \gamma_i$;

(ii) $\zeta_{t+1} \in \mathbb{Z}^2$ with $\mathbb{P}[\zeta_{t+1} = \mathbf{0} \mid V_t \neq 0] = 1$; and

(iii) we can decompose the jumps of Ξ^* via, for $t \in \mathbb{Z}^+$,

$$\xi^*_{t+1} - \xi^*_t = \xi_{(t+1)n_i} - \xi_{tn_i} = \sum_{s=0}^{n_i-1} \theta(\xi_{tn_i+s}) = V_{t+1} j_i \mathbf{q}_i^\perp + \zeta_{t+1}. \tag{4.9}$$

Note that given point (ii), (4.9) is equivalent to, for $t \in \mathbb{Z}^+$,

$$\xi^*_{t+1} - \xi^*_t = V_{t+1} j_i \mathbf{q}_i^\perp \mathbf{1}_{\{V_{t+1} \neq 0\}} + \zeta_{t+1} \mathbf{1}_{\{V_{t+1} = 0\}}.$$

Thus we decompose the jump of Ξ^* at time t into a symmetric component in the perpendicular direction ($V_{t+1} j_i \mathbf{q}_i^\perp$), and a residual component (ζ_{t+1}), such that at any time t only one of the two components is present in a particular realization. By (4.9),

$$\xi^*_t = \xi_0 + \sum_{s=1}^{t} (V_s j_i \mathbf{q}_i^\perp + \zeta_s). \tag{4.10}$$

This decomposition is valid throughout $\mathbb{Z}^2$, but for our purposes we will apply the decomposition involving $\mathbf{q}_i^\perp$ in the wedge $W_i(\beta)$ for appropriate $\beta \in (0, \pi/2)$.

4.4 Exit from rectangles

We will use the decomposition of Section 4.3 to establish (in Lemma 4.5 below) how the walk exits from sufficiently large rectangles aligned in the $\mathbf{q}_i, \mathbf{q}_i^\perp$ directions. First we need two lemmas that deal in turn with the two parts of the decomposition.

The rough outline of the proof of Lemma 4.5 below is as follows. In time $\lfloor \varepsilon N^2 \rfloor$, we show that the process driven by $V_1, V_2, \ldots$ will with positive probability attain distance sufficient to take it well beyond the top/bottom of the rectangle; this is Lemma 4.3 below. On the

other hand, we show that in time $\lfloor \varepsilon N^2 \rfloor$, for small enough $\varepsilon > 0$, the residual process does not stray very far from its initial point with good probability, regardless of the realization of $V_1, V_2, \ldots$; this is Lemma 4.4 below. Together, these two results will enable us to conclude that with good probability the walk will leave a rectangle via the top/bottom. First we need some more notation. Set $Y_0 := \xi_0 \cdot \hat{\mathbf{q}}_i^\perp$ and, for $t \in \mathbb{N}$,

$$Y_t := Y_0 + j_i \|\mathbf{q}_i^\perp\| \sum_{s=1}^{t} V_s. \tag{4.11}$$

Then Y_t is the displacement of the symmetric part of the decomposition for ξ_t^* in the $\mathbf{q}_i^\perp$ direction. The process $(Y_t)_{t\in\mathbb{Z}^+}$ is a symmetric, homogeneous random walk on $\|\mathbf{q}_i^\perp\|\mathbb{Z}$ with $\mathbb{P}[Y_t = Y_{t-1}] = \mathbb{P}[V_t = 0] = 1 - 2\gamma_i < 1$ and jumps of size $\|\mathbf{q}_i^\perp\| j_i$. For $h \in (0, \infty)$, let

$$\tau_h^\perp := \min\left\{ t \in \mathbb{Z}^+ : |Y_t| \geq \lceil 3hN \rceil \|\mathbf{q}_i^\perp\| \right\}. \tag{4.12}$$

Lemma 4.3 *Suppose that (A1) holds. Let $h \in (0, \infty)$. For any $\varepsilon > 0$, there exist $\delta > 0$ and $N_1 \in \mathbb{N}$ such that for any $N \geq N_1$ and any $y \in \mathbb{Z}$ with $|y| \leq 2hN$,*

$$\mathbb{P}[\tau_h^\perp \leq \lfloor \varepsilon N^2 \rfloor \mid Y_0 = \|\mathbf{q}_i^\perp\| y] \geq \delta.$$

Proof. Fix $h \in (0, \infty)$. Suppose $Y_0 = \|\mathbf{q}_i^\perp\| y$, $|y| \leq 2hN$. If $y \neq 0$ then couple a copy of the walk Y_t started from $\|\mathbf{q}_i^\perp\| y$ with another $\tilde{Y}_t$ started from 0 which has jumps in the opposite direction to Y_t until $|Y_t - \tilde{Y}_t| \leq \|\mathbf{q}_i^\perp\| j_i$ for the first time, from which time on $Y_t, \tilde{Y}_t$ jump in the same direction. Then when $|\tilde{Y}_t| \geq K$ we have $|Y_t| \geq K - \|\mathbf{q}_i^\perp\| j_i$, and with probability γ_i the next jump will take $|Y_{t+1}| \geq K$. It follows that for any $\varepsilon > 0$,

$$\begin{aligned} \mathbb{P}[\tau_h^\perp \leq \lfloor \varepsilon N^2 \rfloor \mid Y_0 = \|\mathbf{q}_i^\perp\| y] &\geq \gamma_i \mathbb{P}[\tau_h^\perp \leq \lfloor \varepsilon N^2 \rfloor - 1 \mid Y_0 = 0] \\ &\geq \gamma_i \mathbb{P}[\tau_h^\perp \leq \lfloor \varepsilon' N^2 \rfloor \mid Y_0 = 0], \end{aligned}$$

for any $\varepsilon' \in (0, \varepsilon)$ and all N large enough. Hence it suffices to take $y = 0$.

The process $(Y_t)_{t\in\mathbb{Z}^+}$ is a symmetric random walk on $\|\mathbf{q}_i^\perp\|\mathbb{Z}$ with independent, bounded jumps and $\mathbb{E}[|Y_{t+1} - Y_t|^2] = 2\gamma_i \|\mathbf{q}_i^\perp\|^2 j_i^2 > 0$. Standard central limit theorem estimates imply that for any $\varepsilon > 0$ there exists $\delta > 0$ such that for all N sufficiently large

$$\mathbb{P}\left[Y_{\lfloor \varepsilon N^2 \rfloor} > \lceil 3hN \rceil \|\mathbf{q}_i^\perp\| \mid Y_0 = 0 \right] \geq \delta, \text{ and } \mathbb{P}\left[Y_{\lfloor \varepsilon N^2 \rfloor} < -\lceil 3hN \rceil \|\mathbf{q}_i^\perp\| \mid Y_0 = 0 \right] \geq \delta.$$

Each of the (disjoint) events in the last display implies that $\tau_h^\perp \leq \lfloor \varepsilon N^2 \rfloor$. $\square$

Let $Z_0 := (\xi_0 \cdot \hat{\mathbf{q}}_i)\hat{\mathbf{q}}_i$ and for $t \in \mathbb{N}$ let

$$Z_t := Z_0 + \sum_{s=1}^{t} \zeta_s. \tag{4.13}$$

Thus $(Z_t)_{t\in\mathbb{Z}^+}$ is the residual part of the process $(\xi_t^*)_{t\in\mathbb{Z}^+}$ after the symmetric perpendicular process $(Y_t)_{t\in\mathbb{Z}^+}$ has been extracted. Indeed, with Y_t, Z_t as defined at (4.11), (4.13) we have $\xi_0^* = \xi_0 = Y_0 \hat{\mathbf{q}}_i^\perp + Z_0$, and also from (4.10) that for $t \in \mathbb{N}$,

$$\xi_t^* = Y_t \hat{\mathbf{q}}_i^\perp + Z_t. \tag{4.14}$$

We next show that with good probability the residual process $(Z_t)_{t\in\mathbb{Z}^+}$ does not exit from a suitable ball around its initial point by time $\lfloor \varepsilon N^2 \rfloor$. By construction $(Z_t)_{t\in\mathbb{Z}^+}$ depends on $(V_t)_{t\in\mathbb{N}}$ since the distribution of ζ_{t+1} depends on ξ_{tn_i}. For $t \in \mathbb{N}$, let $\Omega_V(t) := \{-1, 0, 1\}^t$ and let $\omega_V \in \Omega_V(t)$ denote a generic realization of $(V_1, \ldots, V_t)$.

Lemma 4.4 *Suppose that (A1), (A2), and (2.2) hold. Let $r \in (0, 1/2]$. There exist $N_2 \in \mathbb{N}$ and $\varepsilon > 0$ such that for all $N \geq N_2$, all $z \in \mathbb{Z}$ with $|z| \leq b$, and all $\omega_V \in \Omega_V(\lfloor \varepsilon N^2 \rfloor)$,*

$$\mathbb{P}\left[\max_{0\leq t\leq \lfloor \varepsilon N^2\rfloor} \|Z_t - Z_0\| \leq rN \mid (V_1, \ldots, V_{\lfloor \varepsilon N^2\rfloor}) = \omega_V, Z_0 = (N+z)\mathbf{q}_i\right] \geq \frac{1}{2}.$$

Proof. Although the decomposition used in the present paper is different, the proof of this result is similar to (in fact, due to the stronger regularity assumptions, simpler than) the proof of the corresponding Lemma 4.5 in [17], so we omit it. □

We now define notation for our rectangles. Fix $h \in (0, \infty)$, which will determine the aspect ratio of the rectangles. For $N \in \mathbb{N}$, let

$$S(N) := \{\mathbf{x} \in \mathbb{Z}^2 : 0 < \mathbf{x} \cdot \hat{\mathbf{q}}_i < 2N\|\mathbf{q}_i\|, |\mathbf{x} \cdot \hat{\mathbf{q}}_i^{\perp}| < 2hN\|\mathbf{q}_i\|\}, \tag{4.15}$$

and also define regions adjacent to $S(N)$ via

$$\begin{aligned} U_1(N) &:= \{\mathbf{x} \in \mathbb{Z}^2 : \mathbf{x} \cdot \hat{\mathbf{q}}_i \geq 2N\|\mathbf{q}_i\|\}, \\ U_2(N) &:= \{\mathbf{x} \in \mathbb{Z}^2 : 0 < \mathbf{x} \cdot \hat{\mathbf{q}}_i < 2N\|\mathbf{q}_i\|, |\mathbf{x} \cdot \hat{\mathbf{q}}_i^{\perp}| \geq 2hN\|\mathbf{q}_i\|\}. \end{aligned} \tag{4.16}$$

Lemmas 4.3 and 4.4 combine to enable us show that Ξ exits $S(N)$ via $U_2(N)$ with good probability when started from somewhere near the bisector of $S(N)$ in the $\mathbf{q}_i^{\perp}$ direction.

Lemma 4.5 *Suppose that (A1), (A2), and (2.2) hold. Let $h \in (0, \infty)$. Then there exist $\delta > 0$, $N_0 \in \mathbb{N}$ such that for any $N \geq N_0$, any $y, z \in \mathbb{Z}$ with $|y| \leq 2hN$ and $|z| \leq b$,*

$$\mathbb{P}[\Xi \text{ hits } U_2(N) \text{ before } U_1(N) \mid \xi_0 = (N+z)\mathbf{q}_i + y\mathbf{q}_i^{\perp}] \geq \delta.$$

Remark. This result highlights the difference between the exit-from-cones problem and the analogous problem of exit from a half-line in one-dimension, where drift $O(x^{-1})$ does *not* imply finiteness of the exit time. The one-dimensional analogue of Lemma 4.5 is false: classical gambler's ruin estimates imply that for a random walk on $\mathbb{Z}^+$ with mean-drift $O(x^{-1})$ at x, the probabilities of hitting 0, $2M$ first, starting from M, are not necessarily bounded uniformly away from 0.

Proof of Lemma 4.5. Fix $h \in (0, \infty)$. Suppose that $\xi_0 = (N+z)\mathbf{q}_i + y\mathbf{q}_i^{\perp}$. Let $\varepsilon > 0$ be as in the $r = (1 \wedge h)/2$ case of Lemma 4.4. Suppose that $N \geq \max\{N_1, N_2\}$ with N_1, N_2 as in Lemmas 4.3, 4.4 respectively. Define the events

$$G := \left\{\max_{0\leq t\leq \lfloor \varepsilon N^2\rfloor} \|Z_t - Z_0\| \leq (1 \wedge h)N/2\right\}, \quad H := \left\{\tau_h^{\perp} \leq \lfloor \varepsilon N^2 \rfloor\right\}.$$

By (4.14) we have that $|\xi_t^* \cdot \hat{\mathbf{q}}_i^\perp| = |Y_t + Z_t \cdot \hat{\mathbf{q}}_i^\perp| = |Y_t + (Z_t - Z_0) \cdot \hat{\mathbf{q}}_i^\perp|$, since $Z_0 \cdot \hat{\mathbf{q}}_i^\perp = 0$. It follows by the triangle inequality that on $G \cap H$,

$$|\xi_t^* \cdot \hat{\mathbf{q}}_i^\perp| \geq |Y_t| - \|Z_t - Z_0\| \geq \lceil 3hN \rceil \|\mathbf{q}_i^\perp\| - (1 \wedge h)(N/2) \geq 2hN\|\mathbf{q}_i^\perp\|,$$

for some $t \leq \lfloor \varepsilon N^2 \rfloor$, which in particular implies that $|\xi_t \cdot \hat{\mathbf{q}}_i^\perp| \geq 2hN\|\mathbf{q}_i^\perp\|$ for some $t \leq n_i \lfloor \varepsilon N^2 \rfloor$. On the other hand, also on $G \cap H$ it follows from (4.14) that

$$\begin{aligned}\max_{0 \leq t \leq n_i \lfloor \varepsilon N^2 \rfloor} |\xi_t \cdot \hat{\mathbf{q}}_i| &\leq \max_{0 \leq t \leq \lfloor \varepsilon N^2 \rfloor} |\xi_t^* \cdot \hat{\mathbf{q}}_i| + n_i b = \max_{0 \leq t \leq \lfloor \varepsilon N^2 \rfloor} |Z_t \cdot \hat{\mathbf{q}}_i| + n_i b \\ &\leq |Z_0 \cdot \hat{\mathbf{q}}_i| + \max_{0 \leq t \leq \lfloor \varepsilon N^2 \rfloor} \|Z_t - Z_0\| + n_i b < 2N\|\mathbf{q}_i^\perp\|,\end{aligned}$$

for all N sufficiently large, since $Z_0 \cdot \hat{\mathbf{q}}_i = \xi_0 \cdot \hat{\mathbf{q}}_i = (N + z)\|\mathbf{q}_i\|$. Hence (with ξ_0 as given)

$$E := \{\Xi \text{ hits } U_2(N) \text{ before } U_1(N)\} \supseteq G \cap H.$$

H is determined by the realization $\omega_V \in \Omega_V(\lfloor \varepsilon N^2 \rfloor)$, and so (with ξ_0 as given)

$$\mathbb{P}[E] \geq \mathbb{P}[G \cap H] = \sum_{\omega_V \in \Omega_V(\lfloor \varepsilon N^2 \rfloor): H \text{ occurs}} \mathbb{P}[G \mid \omega_V]\mathbb{P}[\omega_V].$$

Applying Lemma 4.4 with $r = (1 \wedge h)/2$ to $\mathbb{P}[G \mid \omega_V]$ we then obtain

$$\mathbb{P}[E \mid \xi_0 = (N + z)\mathbf{q}_i + y\mathbf{q}_i^\perp] \geq \frac{1}{2} \sum_{\omega_V \in \Omega_V(\lfloor \varepsilon N^2 \rfloor): H \text{ occurs}} \mathbb{P}[\omega_V] = \frac{1}{2}\mathbb{P}[H] \geq \frac{\delta}{2} > 0,$$

applying Lemma 4.3. □

4.5 Exit from cones: proof of Lemma 4.1

We can now prove our key upper tail bound. Recall the definition of $\tau_i(\beta)$ from (4.3).

Proof of Lemma 4.1. Take $\xi_0 \in W_i(\beta)$, $\beta \in (0, \pi/2)$. Let $h = \tan\beta \in (0, \infty)$ and

$$k_0 := \min\{k \in \mathbb{N} : 2^k\|\mathbf{q}_i\| \geq \xi_0 \cdot \hat{\mathbf{q}}_i, 2^k \geq N_0, 2^k \geq b\},$$

where N_0 is as in Lemma 4.5 and b is as in (A2). Consider the sequence of rectangles $S(2^k)$ where $k \in \mathbb{Z}^+$, as defined at (4.15), with $h = \tan\beta$. Set $\sigma_0 := 0$ and, for $k \in \mathbb{N}$,

$$\sigma_k := \min\{t \in \mathbb{Z}^+ : \xi_t \cdot \hat{\mathbf{q}}_i \geq 2^k\|\mathbf{q}_i\|\}.$$

Suppose that Ξ has not left $W_i(\beta)$ by the time σ_k for some $k \geq k_0$, i.e., $\tau_i(\beta) > \sigma_k$. Then, using (A2), $2^k\|\mathbf{q}_i\| \leq \xi_{\sigma_k} \cdot \hat{\mathbf{q}}_i \leq 2^k\|\mathbf{q}_i\| + b$ and on $\{\tau_i(\beta) > \sigma_k\}$, from (4.2),

$$|\xi_{\sigma_k} \cdot \hat{\mathbf{q}}_i^\perp| < h|\xi_{\sigma_k} \cdot \hat{\mathbf{q}}_i| \leq 2^k h\|\mathbf{q}_i\| + hb \leq 2 \cdot 2^k h\|\mathbf{q}_i\|,$$

for all $k \geq k_0$. Hence we can apply Lemma 4.5 to the walk started at ξ_{σ_k}, with $N = 2^k \geq N_0$ for $k \geq k_0$. Then, with $U_1(N), U_2(N)$ as defined in (4.16), we obtain, for all $k \geq k_0$,

$$\mathbb{P}[(\xi_t)_{t \geq \sigma_k} \text{ hits } U_2(2^k) \text{ before } U_1(2^k) \mid \tau_i(\beta) > \sigma_k] \geq \delta > 0. \tag{4.17}$$

But by definition of $U_1(N), U_2(N)$, and (4.2), we have that if Ξ hits $U_2(N)$ before $U_1(N)$, then Ξ leaves the wedge $W_i(\beta)$. Moreover, if Ξ has not hit $U_1(2^k)$ by time $\tau_i(\beta)$, then $\max_{0\le t\le \tau_i(\beta)} \xi_t \cdot \hat{\mathbf{q}}_i < 2^{k+1}\|\mathbf{q}_i\|$, so that $\tau_i(\beta) < \sigma_{k+1}$. Hence the inequality (4.17) can be expressed as $\mathbb{P}[\tau_i(\beta) \le \sigma_{k+1} \mid \tau_i(\beta) > \sigma_k] \ge \delta > 0$, for all $k \ge k_0$. Hence, for all $k > k_0$,

$$\mathbb{P}[\tau_i(\beta) > \sigma_k] = \prod_{j=k_0+1}^{k} \mathbb{P}[\tau_i(\beta) > \sigma_j \mid \tau_i(\beta) > \sigma_{j-1}] \cdot \mathbb{P}[\tau_i(\beta) > \sigma_{k_0}] \le C(1-\delta)^k, \tag{4.18}$$

for some $C = C(k_0, \delta) \in (0, \infty)$ that does not depend on k.

We next estimate the tails of the times σ_k. It is most convenient to work once again via the embedded walk Ξ^*. Set $\sigma_k^* := \min\{t \in \mathbb{Z}^+ : \xi_t^* \cdot \hat{\mathbf{q}}_i \ge 2^k\|\mathbf{q}_i\|\}$. For $t \in \mathbb{Z}^+$, for the remainder of this proof write $X_t := \xi_t^* \cdot \hat{\mathbf{q}}_i$. Let $A, C > 0$ and set $W_t := ((C + X_{t\wedge\tau_i(\beta)})^A)$. We show that for A, C sufficiently large, the process $(W_t)_{t\in\mathbb{Z}^+}$ is a strict submartingale so that we can apply a result from [19] to obtain a bound for $\mathbb{E}[\tau_i(\beta) \wedge \sigma_k^*]$.

Note that Taylor's theorem implies that for any $x \ge 0$ and any $y \in \mathbb{R}$ with $|y|$ bounded,

$$(C + x + y)^A - (C + x)^A = A(C + x)^{A-1}\left[y + \frac{(A-1)y^2}{2(C+x)} + O((C+x)^{-2})\right].$$

Set $\theta_t^* = \xi_{t+1}^* - \xi_t^*$. Let $\mathcal{F}_t = \sigma(\xi_0, \dots \xi_t)$. By (4.5) we may apply the last displayed equation with $x = \xi_t^* \cdot \hat{\mathbf{q}}_i$ and $y = \theta_t^* \cdot \hat{\mathbf{q}}_i$ and take expectations to obtain

$$\begin{aligned}
&\mathbb{E}[W_{t+1} - W_t \mid \mathcal{F}_{n_i t}] \\
&= A(C + X_t)^{A-1}\left[\mathbb{E}[\theta_t^* \cdot \hat{\mathbf{q}}_i \mid \mathcal{F}_{n_i t}] + \frac{(A-1)}{2}\frac{\mathbb{E}[(\theta_t^* \cdot \hat{\mathbf{q}}_i)^2 \mid \mathcal{F}_{n_i t}]}{C + X_t} + O((C + X_t)^{-2})\right],
\end{aligned}$$

on $\{t < \tau_i(\beta)\}$. Also, on $\{t < \tau_i(\beta)\}$ we have that $X_t \ge 0$ and $X_t \le \|\xi_t^*\| \le O(X_t)$. So using (4.6) and (4.7) we have that the last displayed expression is bounded below by

$$A(C + X_t)^{A-1}\left[-C_1(1 + X_t)^{-1} + \frac{(A-1)}{C_2}(C + X_t)^{-1} + O((C + X_t)^{-2})\right],$$

for some constants $C_1, C_2 \in (0, \infty)$. Hence we can choose A, C sufficiently large so that $\mathbb{E}[W_{t+1} - W_t \mid \mathcal{F}_{n_i t}] \ge \varepsilon > 0$, on $\{t < \tau_i(\beta)\}$. Moreover, from (4.5) we have $|X_{t+1} - X_t| \le \|\xi_{t+1}^* - \xi_t^*\| \le n_i b$. Hence we can apply a straightforward modification of [19, Lemma 3.2] to obtain, for all $k \ge k_0$, $\mathbb{E}[\tau_i(\beta) \wedge \sigma_k^*] \le \varepsilon^{-1}(C + 2^{k+1} + n_i b)^A$. By definition of ξ_t^*, $\sigma_k \le n_i \sigma_k^*$ a.s., hence there exists $C \in (0, \infty)$ such that $\mathbb{E}[\tau_i(\beta) \wedge \sigma_k] \le 2^{kC}$, for all $k \ge k_0$. Markov's inequality with $M = C + 1$ then implies that for $k \ge k_0$,

$$\mathbb{P}[\tau_i(\beta) \wedge \sigma_k > 2^{kM}] \le 2^{-kM}\mathbb{E}[\tau_i(\beta) \wedge \sigma_k] \le 2^{kC} \cdot 2^{-kM} = 2^{-k}.$$

Combining this with (4.18) and the fact that for any k,

$$\mathbb{P}[\tau_i(\beta) > 2^{kM}] \le \mathbb{P}[\tau_i(\beta) > \sigma_k] + \mathbb{P}[\tau_i(\beta) \wedge \sigma_k > 2^{kM}],$$

we have that $\mathbb{P}[\tau_i(\beta) > 2^{kM}] \le C(1-\delta)^k + 2^{-k}$ for all $k \ge k_0$. It follows that there exist constants $M, \gamma' \in (0, \infty)$, not depending on $\mathbf{x}$, and $C \in (0, \infty)$, which does depend on $\mathbf{x}$, such that for all $k \ge k_0$,

$$\mathbb{P}[\tau_i(\beta) > 2^{kM} \mid \xi_0 = \mathbf{x}] \le C2^{-\gamma' k}. \tag{4.19}$$

Clearly the result extends to all $k \in \mathbb{Z}^+$ for a suitable choice of C in (4.19), depending on k_0 and so also on ξ_0. For any $t > 0$, we have that $t \in [2^{kM}, 2^{(k+1)M})$ for some $k \in \mathbb{Z}^+$. Then given $\xi_0 = \mathbf{x}$ we have from (4.19) that

$$\mathbb{P}[\tau_i(\beta) > t] \leq \mathbb{P}[\tau_i(\beta) > 2^{kM}] \leq C2^{-\gamma' k} \leq C(2^{-M}t)^{-\gamma'/M} = C't^{-\gamma},$$

for some $C', \gamma \in (0, \infty)$, not depending on t, with, moreover, γ not depending on $\mathbf{x}$. □

4.6 Non-existence of moments via an almost-linear Lyapunov function

This section is devoted to our technique for establishing the non-existence part of the proof of Theorem 2.2, which will also enable us to give a proof of Theorem 2.3. In the wedge $\mathcal{W}(\alpha)$, $\alpha \in (0, \pi/2)$, we work with the embedded walk $\xi_t^* = \xi_{tn_i}$, where in this case we can take $n_i = n_0$ as in (A1). We first aim to show that for any $\alpha \in (0, \pi/2)$ there exists $p \in (0, \infty)$ such that $\mathbb{E}[\tau_\alpha^p] = \infty$.

The outline of our approach is as follows. We consider a one-dimensional process $(Y_t)_{t \in \mathbb{Z}^+}$ where $Y_t = g(\xi_t^*)$ for a suitably chosen g and apply Lemma 3.2. More specifically, we construct an almost linear or ε-linear (in the sense of Malyshev [18], see also [11] and [6, Chapter 3]) function g to enable us to apply the generalized form [1] of "Lamperti's conditions" [14] in Lemma 3.2. The idea is to construct g so that its level curves are horizontal translates of $\partial\mathcal{W}(\alpha)$ but with the apex replaced by a circle arc.

Fix $\alpha \in (0, \pi/2)$. During the remainder of this section, set $s := \sin\alpha \in (0, 1)$, $c := \cos\alpha \in (0, 1)$. We now construct the function $g : \mathbb{R}^2 \to [0, \infty)$. Set $g(\mathbf{x}) = 0$ for $\mathbf{x} \in \mathbb{R}^2 \setminus \mathcal{W}(\alpha)$. For $\mathbf{x} = (x_1, x_2) \in \mathcal{W}(\alpha)$ such that $|x_2| \geq \frac{sc}{1+c^2}x_1$ let $g(\mathbf{x}) = sx_1 - c|x_2|$. For $\mathbf{x} \in \mathcal{W}(\alpha)$ with $|x_2| \leq \frac{sc}{1+c^2}x_1$, set $g(\mathbf{x}) = k \in [0, \infty)$ on the minor arc of the circle

$$((2k/s) - x_1)^2 + x_2^2 = k^2 \tag{4.20}$$

between $(k(1 + c^2)/s, kc)$ and $(k(1 + c^2)/s, -kc)$. Then g is specified on $\mathcal{W}(\alpha)$ by its level curves $g(\mathbf{x}) = k$, $k \geq 0$, each of which is $\partial\mathcal{W}(\alpha)$ translated so that the apex is at $(k/s, 0)$ and the tip of the wedge smoothed to a circular arc. See Figure 1.

We now state some properties of the function g. Observe that for $\mathbf{x} \in \mathbb{R}^2$,

$$g(\mathbf{x}) \leq \|\mathbf{x}\|. \tag{4.21}$$

For $\mathbf{x} \in \mathcal{W}(\alpha)$ with $|x_2| \geq \frac{sc}{1+c^2}x_1$, $\nabla g(\mathbf{x}) = (s, \pm c)$ and $\|\nabla g(\mathbf{x})\| = 1$; for $|x_2| \leq \frac{sc}{1+c^2}x_1$,

$$\nabla g(\mathbf{x}) = \frac{1}{D(\mathbf{x})}(-((2g(\mathbf{x})/s) - x_1), x_2) = \frac{1}{D(\mathbf{x})}\left(-\sqrt{g(\mathbf{x})^2 - x_2^2}, x_2\right), \tag{4.22}$$

from (4.20), where $D(\mathbf{x}) := g(\mathbf{x}) + (2/s)(x_1 - (2g(\mathbf{x})/s))$. When $|x_2| \leq \frac{sc}{1+c^2}x_1$, so that the level curve of g is a circular arc, we have

$$g(\mathbf{x})((2/s) - 1) \leq x_1 \leq g(\mathbf{x})((2/s) - s), \text{ and} \tag{4.23}$$

$$-g(\mathbf{x})((2/s) - 1) \leq D(\mathbf{x}) \leq -g(\mathbf{x}). \tag{4.24}$$

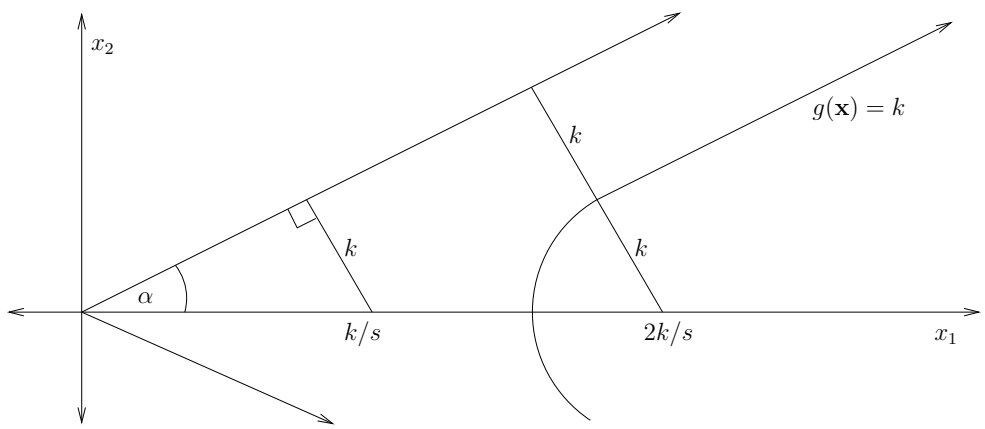

Figure 1: Level curve of the function g.

It follows from (4.22) that for $\mathbf{x} \in \mathcal{W}(\alpha)$ with $|x_2| \leq \frac{sc}{1+c^2}x_1$, $\|\nabla g(\mathbf{x})\| = |D(\mathbf{x})|^{-1}g(\mathbf{x})$. Hence from (4.24),

$$\inf_{\mathbf{x}\in\mathcal{W}(\alpha)} \|\nabla g(\mathbf{x})\| \geq \frac{s}{2-s} \geq \frac{s}{2}, \text{ and } \sup_{\mathbf{x}\in\mathbb{R}^2} \|\nabla g(\mathbf{x})\| \leq 1. \tag{4.25}$$

To obtain our non-existence of moments result for τ_α, we will apply Lemma 3.2 to $Y_t = g(\xi_t^*)$. The next lemma gives some further properties of g that we will need here and later in the proof of Theorem 2.3.

Lemma 4.6 *For $\mathbf{x} \in \mathcal{W}(\alpha)$ with $|x_2| \leq \frac{sc}{1+c^2}x_1$ we have*

$$g(\mathbf{x}) \geq \frac{s}{2}\|\mathbf{x}\|. \tag{4.26}$$

Also, there exists $\varepsilon > 0$ such that for all $\mathbf{x} \in \mathcal{W}(\alpha)$,

$$D_1 g(\mathbf{x}) \geq \varepsilon. \tag{4.27}$$

Finally, there exists $C \in (0,\infty)$ such that for all $\mathbf{x} \in \mathbb{R}^2$ and all $i,j \in \{1,2\}$,

$$|D_{ij}g(\mathbf{x})| \leq C\|\mathbf{x}\|^{-1}. \tag{4.28}$$

Proof. To obtain (4.26), we observe that for $|x_2| \leq \frac{sc}{1+c^2}x_1$, from (4.23),

$$\begin{aligned}\|\mathbf{x}\|^2 = x_1^2 + x_2^2 &\leq \left[\left(\frac{sc}{1+c^2}\left((2/s)-s\right)\right)^2 + \left((2/s)-s\right)^2\right] g(\mathbf{x})^2 \\ &= \left[c^2 + ((2/s)-s)^2\right] g(\mathbf{x})^2 = ((4/s^2)-3)g(\mathbf{x})^2,\end{aligned}$$

and (4.26) follows. Consider (4.27). It suffices to suppose $|x_2| \leq \frac{sc}{1+c^2}x_1$. By (4.22),

$$D_1 g(\mathbf{x}) = \frac{2g(\mathbf{x}) - sx_1}{((4/s)-s)g(\mathbf{x}) - 2x_1} = R\left[1 + \frac{Sx_1}{g(\mathbf{x}) - Rx_1}\right], \tag{4.29}$$

where $R \in (0, 2/3)$ and $S \in (0, 1/6)$ are defined as

$$R = \frac{2}{(4/s) - s}, \text{ and } S = R - (s/2) = \frac{s}{2}\left(\frac{s^2/4}{1 - (s^2/4)}\right). \tag{4.30}$$

Here, since $s \in (0, 1)$, it is straightforward to show that in fact

$$\frac{s}{2} \le R \le \frac{2s}{3}, \text{ and } \frac{s^3}{8} \le S \le \frac{s^3}{6}. \tag{4.31}$$

Moreover, we have from (4.30) and (4.23) that

$$(s^2/4)g(\mathbf{x}) \le g(\mathbf{x}) - Rx_1 \le (s/2)g(\mathbf{x}). \tag{4.32}$$

It follows from (4.29) and (4.32) that $D_1 g(\mathbf{x}) \ge R$, and so with (4.31) we get (4.27).

Now consider (4.28). Note that $D_{ij}g(\mathbf{x}) = 0$ unless $\mathbf{x} \in \mathcal{W}(\alpha)$ with $|x_2| \le \frac{sc}{1+c^2}x_1$, so it suffices to consider that case. First consider $D_{11}g(\mathbf{x})$. Differentiating in (4.29) yields

$$\begin{aligned} D_{11}g(\mathbf{x}) &= \frac{RS}{g(\mathbf{x}) - Rx_1} - \frac{RSx_1}{(g(\mathbf{x}) - Rx_1)^2}\left(D_1 g(\mathbf{x}) - R\right) \\ &= \frac{RS}{(g(\mathbf{x}) - Rx_1)^3}\left((g(\mathbf{x}) - Rx_1)^2 - RSx_1^2\right), \end{aligned} \tag{4.33}$$

using (4.29) once more. Then from (4.33), using (4.31), (4.32), and (4.23), together with (4.26), we obtain (4.28) in the case $i = j = 1$. The other cases of (4.28) follow by analogous but tedious calculations, which we omit. □

4.7 Proofs of Theorems 2.2 and 2.3

The next result gives some basic properties of the process $(g(\xi_t^*))_{t\in\mathbb{Z}^+}$.

Lemma 4.7 *Suppose that (A1), (A2) and (2.2) hold. Then there exist $B, C \in (0, \infty)$ and $\varepsilon > 0$ for which, for any $\mathbf{x} \in \mathcal{W}(\alpha)$,*

$$\mathbb{P}[|g(\xi_{t+1}^*) - g(\xi_t^*)| \le B] = 1; \tag{4.34}$$

$$|\mathbb{E}[g(\xi_{t+1}^*) - g(\xi_t^*) \mid \xi_t^* = \mathbf{x}]| \le C\|\mathbf{x}\|^{-1}; \tag{4.35}$$

$$\mathbb{E}[(g(\xi_{t+1}^*) - g(\xi_t^*))^2 \mid \xi_t^* = \mathbf{x}] \ge \varepsilon. \tag{4.36}$$

Proof. The mean value theorem for functions of two variables implies that

$$g(\xi_{t+1}^*) - g(\xi_t^*) = (\xi_{t+1}^* - \xi_t^*) \cdot \nabla g(\mathbf{z}), \tag{4.37}$$

where $\mathbf{z} = \xi_t^* + \eta(\xi_{t+1}^* - \xi_t^*)$ for some $\eta \in [0, 1]$. So (4.37) implies that $|g(\xi_{t+1}^*) - g(\xi_t^*)| \le \|\xi_{t+1}^* - \xi_t^*\|$, a.s., by (4.25), which with (4.5) yields (4.34). Similarly, by (4.37) and (4.25),

$$|\mathbb{E}[g(\xi_{t+1}^*) - g(\xi_t^*) \mid \xi_t^* = \mathbf{x}]| \le 2\|\mathbb{E}[\xi_{t+1}^* - \xi_t^* \mid \xi_t^* = \mathbf{x}]\|,$$

and then (4.7) implies (4.35). Finally, using (A1) we have from (4.37) that for $\mathbf{x} \in \mathcal{W}(\alpha)$,

$$\mathbb{E}[(g(\xi^*_{t+1}) - g(\xi^*_t))^2 \mid \xi^*_t = \mathbf{x}] \geq \kappa[k_1 \mathbf{e}_1 \cdot \nabla g(\mathbf{z}_1)]^2,$$

where $\mathbf{z}_1 = \mathbf{x} + \eta_1 k_1 \mathbf{e}_1$, for some $\eta_1 \in [0,1]$; so in particular $\mathbf{z}_1 \in \mathcal{W}(\alpha)$. Thus, by (4.27), $\mathbb{E}[(g(\xi^*_{t+1}) - g(\xi^*_t))^2 \mid \xi^*_t = \mathbf{x}] \geq \kappa k_1^2 \varepsilon^2 > 0$, giving (4.36). □

Now we verify that $g(\xi^*_t)$ satisfies the conditions of Lemma 3.2.

Lemma 4.8 *Suppose that (A1), (A2) and (2.2) hold. For $A > 0$ large enough there exist $C, D \in (0, \infty)$, $r > 1$, and $p_0 > 0$ such that for any $t \in \mathbb{Z}^+$, on $\{\upsilon_A > t\}$, (3.1), (3.2), and (3.3) hold for $Y_t = g(\xi^*_t)$.*

Proof. Let $Y_t = g(\xi^*_t)$, $t \in \mathbb{Z}^+$. Let $r > 0$. We need to estimate $\mathbb{E}[Y_{t+1}^{2r} - Y_t^{2r} \mid \xi^*_t = \mathbf{x}]$. By Taylor's theorem, for $y > 0$ and δ with $|\delta| \leq B$, there exists $\eta \in [0,1]$ for which

$$\begin{aligned}(y+\delta)^{2r} - y^{2r} &= 2r\delta y^{2r-1} + r(2r-1)\delta^2 (y + \eta\delta)^{2r-2} \\ &= 2r\delta y^{2r-1} + r(2r-1)\delta^2 y^{2r-2} + o(y^{2r-2}). \end{aligned} \tag{4.38}$$

We now establish (3.2). Let $r = 1$ in (4.38) to obtain

$$\mathbb{E}[Y_{t+1}^2 - Y_t^2 \mid \xi^*_t = \mathbf{x}] \geq 2g(\mathbf{x})\mathbb{E}[Y_{t+1} - Y_t \mid \xi^*_t = \mathbf{x}] \geq -2Cg(\mathbf{x})\|\mathbf{x}\|^{-1},$$

by (4.35). Then (4.21) completes the proof of (3.2). Now let $\mathcal{F}_t = \sigma(\xi^*_0, \ldots, \xi^*_t)$. Then, by the $r > 1$ case of (4.38), $\mathbb{E}[Y_{t+1}^{2r} - Y_t^{2r} \mid \mathcal{F}_t]$ is bounded above by

$$2rg(\mathbf{x})^{2r-1}\mathbb{E}[Y_{t+1} - Y_t \mid \mathcal{F}_t] + 2r^2\mathbb{E}[(Y_{t+1} - Y_t)^2 \mid \mathcal{F}_t](Y_t + B)^{2r-2}.$$

On $\{\upsilon_A > t\}$, $g(\xi^*_t) > A$ so $\xi^*_t \in \mathcal{W}(\alpha)$. So by (4.34) and (4.35), on $\{\upsilon_A > t\}$,

$$\mathbb{E}[Y_{t+1}^{2r} - Y_t^{2r} \mid \mathcal{F}_t] \leq 2CrY_t^{2r-1}\|\xi^*_t\|^{-1} + 2r^2B^2(Y_t + B)^{2r-2} = O(Y_t^{2r-2}),$$

by (4.21). Thus (3.3) is satisfied for $r > 1$. Similarly, taking $r = p_0$ in (4.38) and using (4.35) again, but this time using the lower bound in (4.36), valid on $\{\upsilon_A > t\}$,

$$\begin{aligned}\mathbb{E}[Y_{t+1}^{2p_0} - Y_t^{2p_0} \mid \mathcal{F}_t] &\geq -2p_0CY_t^{2r-1}\|\xi^*_t\|^{-1} + p_0(2p_0-1)\varepsilon Y_t^{2r-2} + o(Y_t^{2r-2}) \\ &\geq Y_t^{2r-2}p_0\left(-2C + (2p_0-1)\varepsilon + o(1)\right),\end{aligned}$$

by (4.21), and the last expression is non-negative on $\{\upsilon_A > t\}$, taking A and p_0 sufficiently large. □

We need one more result that says, under our regularity conditions, an asymptotically zero drift ensures that the walk cannot be forced to jump straight out of the wedge with probability 1, provided it starts far enough away from $\mathbf{0}$.

Lemma 4.9 *Suppose that (A1) and (A2) hold and that $\|\mu(\mathbf{x})\| \to 0$ as $\|\mathbf{x}\| \to \infty$. Let $\alpha \in (0, \pi]$. There exist $\varepsilon, A, C \in (0, \infty)$ such that for any $\mathbf{x} \in \mathcal{W}(\alpha)$ with $\|\mathbf{x}\| \geq A$,*

$$\mathbb{P}[\Xi \text{ hits } B_C((\varepsilon\|\mathbf{x}\|, 0)) \text{ before } \mathbb{R}^2 \setminus \mathcal{W}(\alpha) \mid \xi_0 = \mathbf{x}] > 0.$$

Proof. Let $d(\mathbf{x})$ denote the distance of $\mathbf{x}$ from the boundary of the wedge $\mathcal{W}(\alpha)$. Suppose that $\mathbf{x} \in \mathcal{W}(\alpha)$ and, without loss of generality, $x_2 > 0$. First let $\alpha < \pi/2$. Given $d(\mathbf{x}) > bn_0$, condition (A1) implies that with probability at least κ the walk starting at $\mathbf{x} \in \mathcal{W}(\alpha)$ will end up at $\mathbf{x} - k\mathbf{e}_2$ in n_0 steps, while during this time (A2) implies the walk cannot have left the wedge. Repeating this argument a finite number of times (depending on $\mathbf{x}$) until the desired ball is reached leads to the desired conclusion for all such $\mathbf{x}$. A similar argument works when $\alpha \geq \pi/2$ and $d(\mathbf{x}) > bn_0$, starting with steps of $k\mathbf{e}_1$.

Thus it remains to deal with the case where the walk starts at $\mathbf{x}$ with $d(\mathbf{x}) \leq bn_0$ but $\|\mathbf{x}\|$ large. Recall (see [19, p. 4]) that (A1) implies that $\mathbb{P}[\xi_{t+1} \neq \mathbf{x} \mid \xi_t = \mathbf{x}]$ is uniformly positive. We may suppose that $\mathbf{x}$ is such that $\mathbb{P}[(\xi_{t+1} - \xi_t) \cdot \mathbf{e}_\perp(\alpha) \neq 0 \mid \xi_t = \mathbf{x}] > 0$, since if this is not the case then (A1) entails that there is positive probability of the walk reaching such an $\mathbf{x}$ in a finite number of jumps parallel to the boundary of the wedge (and hence, by (A2), remaining inside $\mathcal{W}(\alpha)$ provided the walk started far enough from $\mathbf{0}$). So we may take $\mathbf{x}$ such that there is positive probability of the next jump having a component perpendicular to the wedge boundary. In fact, for $\|\mathbf{x}\|$ large enough, we have $\mathbb{P}[(\xi_{t+1} - \xi_t) \cdot \mathbf{e}_\perp(\alpha) < 0 \mid \xi_t = \mathbf{x}] > 0$, so that there is positive probability of the walk jumping 'farther into' the wedge. To see this, note that since Ξ lives on (a subset of) $\mathbb{Z}^2$ and, by (A2), has uniformly bounded jumps there are only finitely many possible values for $\xi_{t+1} - \xi_t$, and so any non-zero component in the $\mathbf{e}_\perp(\alpha)$ direction must in fact be greater in absolute value than some $\delta > 0$ not depending on $\mathbf{x}$. Then

$$\mu(\mathbf{x}) \cdot \mathbf{e}_\perp(\alpha) \geq \delta \mathbb{P}[(\xi_{t+1} - \xi_t) \cdot \mathbf{e}_\perp(\alpha) \geq \delta \mid \xi_t = \mathbf{x}] - b\mathbb{P}[(\xi_{t+1} - \xi_t) \cdot \mathbf{e}_\perp(\alpha) < \delta \mid \xi_t = \mathbf{x}].$$

Take $\|\mathbf{x}\|$ large enough so that $\|\mu(\mathbf{x})\| \leq \varepsilon$. Writing $p = \mathbb{P}[(\xi_{t+1} - \xi_t) \cdot \mathbf{e}_\perp \geq \delta \mid \xi_t = \mathbf{x}]$ we have $\varepsilon \geq \delta p - b(1-p)$, implying that $p < 1$ for ε small enough. For $\|\mathbf{x}\|$ large enough, a finite number of such jumps occur with positive probability and take Ξ to distance at least bn_0 from the boundary of the wedge, so we can then appeal to the first part of the proof. $\square$

Proof of Theorem 2.2. Let $\alpha \in (0, \pi/2)$. To prove Theorem 2.2, it suffices to show that $\mathbb{E}[\tau_\alpha^p] = \infty$ and $\mathbb{E}[\tau_\alpha^q] < \infty$ for some p, q with $0 < q < p < \infty$. First, we apply Lemma 4.1 in the case $i = 4$, $\beta = \alpha$, so that $W_4(\beta) = \mathcal{W}(\alpha)$ and $\tau_i(\beta) = \tau_\alpha$. Then from Lemma 4.1, for some $\gamma, C \in (0, \infty)$, where γ does not depend on $\mathbf{x}$,

$$\mathbb{E}[\tau^q \mid \xi_0 = \mathbf{x}] \leq 1 + \int_1^\infty \mathbb{P}[\tau > r^{1/q}]\mathrm{d}r \leq 1 + C \int_1^\infty r^{-\gamma/q}\mathrm{d}r < \infty,$$

provided $q \in (0, \gamma')$.

Finally, Lemma 4.8 implies that we can apply Lemma 3.2 with $Y_t = g(\xi_t^*)$, so that for some $A, p \in (0, \infty)$ we have $\mathbb{E}[\upsilon_A^p \mid \xi_0 = \mathbf{x}] = \infty$ for all $\mathbf{x} \in \mathcal{W}(\alpha)$ with $g(\mathbf{x})$ sufficiently large. But by definition of g and Ξ^*, and (A2), $\tau_\alpha \geq n_0(\upsilon_A - 1)$, a.s., for $A > b$. Hence $\mathbb{E}[\tau_\alpha^p \mid \xi_0 = \mathbf{x}] = \infty$ for all $\mathbf{x} \in \mathcal{W}(\alpha)$ with $g(\mathbf{x})$ sufficiently large. By Lemma 4.9, the conclusion extends to all $\mathbf{x} \in \mathcal{W}(\alpha)$ with $\|\mathbf{x}\|$ large enough. $\square$

Remark. The difficulty with extending the overlapping quadrant argument of Section 4.2 to show existence of moments for $\alpha \geq \pi/2$ is that the constant C in Lemma 4.1 depends upon $\mathbf{x}$, and so some control is required over the location of Ξ on its exit from each quadrant

Q_i. Such an argument should be possible using similar techniques to those employed here; for reasons of space we do not pursue this here.

To prove Theorem 2.3, we use a similar argument to the non-existence part of Theorem 2.2. In particular, we refine the lower bound in (4.35) that depends explicitly upon the constant c in (2.3). For this (in Lemma 4.10 below), we replace the first-order Taylor expansion used in the proof of Lemma 4.7 with a second-order expansion.

Lemma 4.10 *Suppose that (A1) and (A2) hold, and that $\alpha \in (0, \pi/2)$. Suppose that (2.3) holds for some $c > 0$. Then there exist $\varepsilon, C \in (0, \infty)$, not depending on d, such that for all $\mathbf{x} \in \mathcal{W}(\alpha)$ with $\|\mathbf{x}\|$ sufficiently large*

$$\mathbb{E}[g(\xi^*_{t+1}) - g(\xi^*_t) \mid \xi^*_t = \mathbf{x}] \geq \|\mathbf{x}\|^{-1}(\varepsilon c - C).$$

Proof. Write $\xi^*_{t+1} - \xi^*_t = (\theta^*_1(\xi^*_t), \theta^*_2(\xi^*_t))$ in Cartesian components. Given $\xi^*_t = \mathbf{x}$, (4.8) holds with $n_i = n_0$, so (2.3) implies that $\mathbb{E}[\theta^*_1(\mathbf{x})] \geq (n_0 c + o(1))\|\mathbf{x}\|^{-1}$ and $\mathbb{E}[\theta^*_2(\mathbf{x})] = o(\|\mathbf{x}\|^{-1})$. Conditional on $\xi^*_t = \mathbf{x}$, Taylor's theorem gives

$$g(\xi^*_{t+1}) - g(\xi^*_t) = \sum_i \theta^*_i(\mathbf{x}) D_i g(\mathbf{x}) + \frac{1}{2} \sum_{i,j} \theta^*_i(\mathbf{x}) \theta^*_j(\mathbf{x}) D_{ij} g(\mathbf{z})$$

for some $\mathbf{z} \in \mathbb{R}^2$. Then taking expectations and using (4.25), (4.28), and (A2), we have

$$\mathbb{E}[g(\xi^*_{t+1}) - g(\xi^*_t) \mid \xi^*_t = \mathbf{x}] \geq \frac{n_0 c + o(1)}{\|\mathbf{x}\|} D_1 g(\mathbf{x}) - \frac{C}{\|\mathbf{x}\|}.$$

Then (4.27) completes the proof. □

Proof of Theorem 2.3. Again we apply Lemma 3.2 to $Y_t = g(\xi_t)$, analogously to the proof of the non-existence part of Theorem 2.2. Repeating the argument for Lemma 4.8, (3.2) and (3.3) hold as before, but now using Lemma 4.10 we have that (3.1) holds for $p_0 = 1/2$, taking c sufficiently large. □

5 Subcritical case: proof of Theorem 2.4

5.1 Overview

In this section we prove Theorem 2.4. The proofs of parts (i) and (ii) of Theorem 2.4 use the Lyapunov functions f_w defined at (3.5) but are otherwise independent.

The functions f_w are well-suited to the subcritical case, allowing us to obtain the explicit exponents in Theorem 2.4. The technique in Section 4.5, used to prove the existence of moments in Theorem 2.2, does not give sharp exponents, since γ in Lemma 4.1 depends on the δ in Lemma 4.3, which depends upon the ε in Lemma 4.4, and these results assume very general conditions on Ξ. In addition, the method in Section 4.5 works only for $\alpha < \pi/2$. Similarly, the method used in Section 4.6 to prove the non-existence of moments in Theorem

2.2 is not sharp enough to produce the correct exponents that we require for Theorem 2.4, and again needs $\alpha < \pi/2$.

The outline of this section is as follows. In Section 5.2 we give the technical preliminaries for the proof of Theorem 2.4(i) which we present in Section 5.3. The more difficult problem of non-existence of moments needs considerably more work. Preliminary calculations are in Section 5.4. We are not able to use the general result Lemma 3.2 in this case, so we use a more elementary approach based on giving a lower bound for the probability that the walk takes a certain time to leave a wedge. This key estimate is given in Section 5.5. Finally, the proof of Theorem 2.4(ii) is completed in Section 5.6.

5.2 Existence of moments

For a given $\alpha \in (0, \pi]$, we fix $w \in (0, \pi/(2\alpha))$. Then $\mathcal{W}(\alpha)$ lies inside the larger wedge $\mathcal{W}(\pi/(2w))$. Define the modified random walk $\tilde{\Xi} = (\tilde{\xi}_t)_{t\in\mathbb{Z}^+}$ by $\tilde{\xi}_t := \xi_t \mathbf{1}_{\{t\le\tau_\alpha\}}$, so that $\tilde{\Xi}$ is identical to Ξ on $\mathcal{W}(\alpha)$ but from $\mathbf{x} \notin \mathcal{W}(\alpha)$ jumps directly to $\mathbf{0}$ and remains there; then $\tilde{\xi}_t = \mathbf{0}$ for $t \ge \tau_\alpha + 1$. For $t \in \mathbb{Z}^+$, set $X_t := f_w(\tilde{\xi}_t)^{1/w}$. For $B \in (0, \infty)$, define

$$\tilde{\tau}_{\alpha,B} := \min\{t \in \mathbb{Z}^+ : X_t \le B\}.$$

The next result will be the basis for our results in this section.

Lemma 5.1 *Suppose that (A1) and (A2) hold. Fix $\alpha \in (0, \pi]$ and $w \in (0, \pi/(2\alpha))$. Suppose that there exist $p_0 > 0$, $A_0, C \in (0, \infty)$ such that for all $\mathbf{x} \in \mathcal{W}(\alpha)$ with $\|\mathbf{x}\| \ge A_0$,*

$$\mathbb{E}[f_w(\xi_{t+1})^{2p_0/w} - f_w(\xi_t)^{2p_0/w} \mid \xi_t = \mathbf{x}] \le -C f_w(\mathbf{x})^{(2p_0-2)/w}. \tag{5.1}$$

Then for any $p \in [0, p_0)$ and any $\mathbf{x} \in \mathcal{W}(\alpha)$, $\mathbb{E}[\tau_\alpha^p \mid \xi_0 = \mathbf{x}] < \infty$.

Proof. $\tilde{\xi}_{\tau_\alpha+1} = \mathbf{0}$ so $X_{\tau_\alpha+1} = 0$; hence, for any $B > 0$, $\tilde{\tau}_{\alpha,B} \le \tau_\alpha + 1$ a.s.. Hence

$$\{\tilde{\tau}_{\alpha,B} > t\} \subseteq \{\tau_\alpha > t, \xi_t \in \mathcal{W}(\alpha)\} \cup \{\tau_\alpha = t, \xi_t \in \mathcal{W}(\pi/(2w)) \setminus \mathcal{W}(\alpha)\}, \tag{5.2}$$

for all B sufficiently large, using (A2) and the fact that by definition $\{\tilde{\tau}_{\alpha,B} > t\} \subseteq \{\|\xi_t\| > B\}$. We consider the two events in the disjoint union in (5.2) in turn. Let $\mathcal{F}_t := \sigma(\xi_0, \xi_1, \ldots, \xi_t)$. On $\{\tau_\alpha > t\}$ we have $\xi_t = \tilde{\xi}_t$ and $\xi_{t+1} = \tilde{\xi}_{t+1}$. So by (5.1) there exists $C' \in (0, \infty)$ such that, on $\{\tau_\alpha > t\}$,

$$\mathbb{E}[X_{t+1}^{2p_0} - X_t^{2p_0} \mid \mathcal{F}_t] \le -C' X_t^{2p_0-2}. \tag{5.3}$$

On $\{\tau_\alpha = t\}$, $\mathbb{E}[X_{t+1}^{2p_0} - X_t^{2p_0} \mid \mathcal{F}_t] = -X_t^{2p_0}$, so that on $\{\tilde{\tau}_{\alpha,B} > t\} \cap \{\tau_\alpha = t\}$, $\mathbb{E}[X_{t+1}^{2p_0} - X_t^{2p_0} \mid \mathcal{F}_t] \le -B^2 X_t^{2p_0-2}$, since $\tilde{\tau}_{\alpha,B} > t$ implies that $X_t^2 \ge B^2$.

Thus, for some $C' \in (0, \infty)$, (5.3) holds on $\{\tilde{\tau}_{\alpha,B} > t\}$ for any $B \ge B_0$, say. We apply Lemma 3.1 with $Y_t = X_t$ to obtain, for any $p \in [0, p_0)$, $B \ge B_0$, and $\mathbf{x} \in \mathcal{W}(\alpha)$,

$$\mathbb{E}[\tilde{\tau}_{\alpha,B}^p \mid \xi_0 = \mathbf{x}] < \infty. \tag{5.4}$$

It remains to deduce the corresponding result for τ_α.

On $\{\tau_\alpha \geq t\}$, $\tilde{\xi}_t = \xi_t$ and so by (3.16), on $\{\tau_\alpha \geq t\}$,

$$\|\xi_t\| \geq X_t \geq \varepsilon_{\alpha,w}^{1/w} \|\xi_t\|. \tag{5.5}$$

Recall that $\tilde{\tau}_{\alpha,B} \leq \tau_\alpha + 1$. On $\{\tilde{\tau}_{\alpha,B} \leq \tau_\alpha\}$, $\|\xi_{\tilde{\tau}_{\alpha,B}}\| \leq \varepsilon_{\alpha,w}^{-1/w} X_{\tilde{\tau}_{\alpha,B}} \leq \varepsilon_{\alpha,w}^{-1/w} B$ by (5.5). On the other hand, on $\{\tilde{\tau}_{\alpha,B} = \tau_\alpha + 1\}$, clearly $\tau_\alpha \leq \tilde{\tau}_{\alpha,B}$. Recalling the definition of $\tau_{\alpha,A}$ from (3.4), it follows that for all $A \geq B\varepsilon_{\alpha,w}^{-1/w}$, a.s., $\tau_{\alpha,A} \leq \tilde{\tau}_{\alpha,B}$. Then with (5.4) we obtain that for all $\mathbf{x} \in \mathcal{W}(\alpha)$ and all A sufficiently large $\mathbb{E}[\tau_{\alpha,A}^p \mid \xi_0 = \mathbf{x}] < \infty$.

Condition (A1) then extends the result to τ_α by standard 'irreducibility' arguments. Indeed, (A1) implies that for random variables $K_0, K_1, K_2, \ldots$ with $\mathbb{P}[K_i \geq t] \leq \mathrm{e}^{-ct}$, for some $c > 0$, $\tau_\alpha \leq \sum_{i=1}^{K_0} (\tau_i + K_i)$, where $\tau_1, \tau_2, \ldots$ are copies of $\tau_{\alpha,A}$; here K_0 represents the number of visits to $B_A(\mathbf{0})$ before leaving the wedge, and $K_1, K_2, \ldots$ are the durations of the successive visits. By (A2), on each exit from $B_A(\mathbf{0})$ into $\mathcal{W}(\alpha)$, Ξ is restricted to a finite number of states, and so $\mathbb{E}[\tau_i^p]$ is uniformly bounded. Hence, for any $p < p_0$,

$$\begin{aligned}\mathbb{P}[\tau_\alpha \geq t] &\leq \mathbb{P}[K_0 \geq C \log t] + \sum_{i=1}^{C \log t} \mathbb{P}[K_i \geq C \log t] + \sum_{i=1}^{C \log t} \mathbb{P}[\tau_i \geq t/(2C \log t)] \\ &= O(t^{-p} (\log t)^{p+1}),\end{aligned}$$

for $C < \infty$ large enough, by Boole's and Markov's inequalities. Thus $\mathbb{E}[\tau_\alpha^q] < \infty$ for any $q < p < p_0$. This completes the proof. □

5.3 Proof of Theorem 2.4(i)

The next result, with Lemma 5.1, will enable us to deduce Theorem 2.4(i).

Lemma 5.2 *Suppose that (A2) holds. Let $\alpha \in (0, \pi]$. Suppose that for some $\sigma^2 \in (0, \infty)$, for $\mathbf{x} \in \mathcal{W}(\alpha)$ as $\|\mathbf{x}\| \to \infty$,*

$$\|\mu(\mathbf{x})\| = o(\|\mathbf{x}\|^{-1}); \quad M_{12}(\mathbf{x}) = o(1); \quad M_{11}(\mathbf{x}) = \sigma^2 + o(1); \quad M_{22}(\mathbf{x}) = \sigma^2 + o(1). \tag{5.6}$$

Then for any $w \in (0, \pi/(2\alpha))$ and any $\gamma \in (0, 1)$, there exist constants $A, C \in (0, \infty)$ for which for all $\mathbf{x} \in \mathcal{W}_A(\alpha)$,

$$\mathbb{E}[f_w(\xi_{t+1})^\gamma - f_w(\xi_t)^\gamma \mid \xi_t = \mathbf{x}] \leq -C f_w(\mathbf{x})^{\gamma - (2/w)}. \tag{5.7}$$

Proof. Let $w \in (0, \pi/(2\alpha))$. For $\mathbf{x} \in \mathcal{W}(\alpha)$, we have that (3.16) holds. Then by Lemma 3.5 with (5.6) we have that for $\gamma \in \mathbb{R}$,

$$\mathbb{E}[f_w(\xi_{t+1})^\gamma - f_w(\xi_t)^\gamma \mid \xi_t = \mathbf{x}] = \frac{1}{2}\gamma(\gamma - 1) w^2 \sigma^2 f_w(\mathbf{x})^{\gamma - 2} r^{2w-2} (1 + o(1)), \tag{5.8}$$

for all $\mathbf{x} \in \mathcal{W}(\alpha)$, as $\|\mathbf{x}\| \to \infty$. It follows from (5.8) and (3.16) that for $\gamma \in (0, 1)$ and some $C \in (0, \infty)$, for $\mathbf{x} \in \mathcal{W}(\alpha)$ with $\|\mathbf{x}\|$ sufficiently large (5.7) holds. □

Proof of Theorem 2.4(i). Let $w \in (0, \pi/(2\alpha))$. For $\gamma \in (0, 1)$, take $p_0 = \gamma w/2$. Then Lemma 5.2 says that for $\mathbf{x} \in \mathcal{W}(\alpha)$ with $\|\mathbf{x}\|$ sufficiently large (5.1) holds for $\gamma \in (0, 1)$ and $w \in (0, \pi/(2\alpha))$. Then Lemma 5.1 implies that for any $\mathbf{x} \in \mathcal{W}(\alpha)$, $\mathbb{E}[\tau_\alpha^p \mid \xi_0 = \mathbf{x}] < \infty$ for all $p \in [0, p_0)$. Since both $\gamma < 1$ and $w < \pi/(2\alpha)$ may be taken arbitrarily close to their upper bounds, we may choose any p less than $\pi/(4\alpha)$. □

5.4 Non-existence of moments

Let $\alpha \in (0, \pi]$. Throughout this section we will take $w = \pi/(2\alpha)$. We will again be interested in $f_w(\xi_t)^\gamma$, $\gamma \in \mathbb{R}$, this time in the wedge $\mathcal{W}(\alpha)$. Due to difficulties with estimating the behaviour of $f_w(\xi_t)^\gamma$ near the boundary of the wedge $\mathcal{W}(\alpha)$ (cf Lemma 3.5), we cannot apply the non-existence theorems from [1] (such as Lemma 3.2 above). Thus we need a different approach.

A key step in this section is a good-probability lower-bound on the time taken to leave a wedge; this is Lemma 5.5 below. A similar approach is used in [2], where Lemma 6.2 deals with a special case of a random walk in a quarter-plane. In any case, to show non-existence of moments something like Lemma 5.5 is required; analogous lemmas are needed for the general results of [1, 14].

We use the Lyapunov function $\hat{f}_w$ where $\hat{f}_w(\mathbf{x}) := f_w(\mathbf{x})\mathbf{1}_{\{\mathbf{x}\in\mathcal{W}(\alpha)\}}$ for $\mathbf{x} \in \mathbb{R}^2$. The first task of this section is to estimate the mean increment of $\hat{f}_w(\xi_t)^\gamma$ for $\gamma > 1$. We recall that for $w = \pi/(2\alpha)$, Lemma 3.5 applies for f_w only in a wedge smaller than $\mathcal{W}(\alpha)$. The next result will allow us to overcome this obstacle. For $K > 0$ we use the notation

$$\mathcal{W}^K(\alpha) := \left\{\mathbf{x} \in \mathcal{W}(\alpha) : f_w(\mathbf{x}) \geq K^{-1}\|\mathbf{x}\|^{w-1}\right\}. \tag{5.9}$$

Lemma 5.3 *Let $\alpha \in (0, \pi]$ and $w = \pi/(2\alpha)$. Suppose that (A2) holds, and that for some $v \in (0, \infty)$, for $\mathbf{x} \in \mathcal{W}(\alpha)$, as $\|\mathbf{x}\| \to \infty$,*

$$\|\mu(\mathbf{x})\| = o(1); \quad M_{12}(\mathbf{x}) = o(1); \quad M_{11}(\mathbf{x}) \geq v + o(1); \quad M_{22}(\mathbf{x}) \geq v + o(1). \tag{5.10}$$

Then there exist $A, K \in (0, \infty)$ such that $\mathbb{E}[\hat{f}_w(\xi_{t+1}) - \hat{f}_w(\xi_t) \mid \xi_t = \mathbf{x}] \geq 0$ for all $\mathbf{x} \in \mathcal{W}_A(\alpha) \setminus \mathcal{W}^K(\alpha)$.

Proof. For $K > 0$, take $\mathbf{x} \in \mathcal{W}(\alpha) \setminus \mathcal{W}^K(\alpha)$. By (5.9), $f_w(\mathbf{x}) \leq K^{-1}r^{w-1}$ and hence $\cos(w\varphi) \leq K^{-1}r^{-1}$. Thus $\mathbf{x}$ is close to the boundary $\partial\mathcal{W}(\alpha)$. In order to estimate the expected change in f_w on a jump of Ξ started from $\mathbf{x}$, we introduce the notation $U(\mathbf{x}) := \{\mathbf{y} \in \mathcal{W}(\alpha) : f_w(\mathbf{y}) \geq f_w(\mathbf{x})\}$. We use the shorthand $\hat{\Delta} = \hat{f}_w(\xi_{t+1}) - \hat{f}_w(\xi_t)$.

Since $\hat{f}_w(\xi_{t+1}) \geq 0$, we have $\mathbb{E}[\hat{\Delta}\mathbf{1}_{\{\xi_{t+1}\notin U(\mathbf{x})\}} \mid \xi_t = \mathbf{x}] \geq -f_w(\mathbf{x}) \geq -K^{-1}r^{w-1}$, so

$$\mathbb{E}[\hat{\Delta} \mid \xi_t = \mathbf{x}] \geq \mathbb{E}[\hat{\Delta}\mathbf{1}_{\{\xi_{t+1}\in U(\mathbf{x})\}} \mid \xi_t = \mathbf{x}] - K^{-1}r^{w-1}. \tag{5.11}$$

For a random variable X with $\mathbb{P}[|X| < m] = 1$, $\mathbb{P}[m|X| > X^2] = 1$ and so $\mathbb{E}|X| \geq m^{-1}\mathbb{E}[X^2]$. Moreover, $\mathbb{E}[X\mathbf{1}_{\{X\geq 0\}}] = (\mathbb{E}[X] + \mathbb{E}|X|)/2$. So we conclude that

$$\mathbb{E}[X\mathbf{1}_{\{X\geq 0\}}] \geq (\mathbb{E}[X] + m^{-1}\mathbb{E}[X^2])/2. \tag{5.12}$$

Now write $\Delta = f_w(\xi_{t+1}) - f_w(\xi_t)$. Then $\{\Delta \geq 0, \xi_t = \mathbf{x}\} = \{\xi_{t+1} \in U(\mathbf{x}), \xi_t = \mathbf{x}\}$. Hence applying the elementary inequality (5.12) with $X = \Delta$ and using the bound (3.11) gives, for some $C \in (0, \infty)$ and all $\mathbf{x} \in \mathcal{W}(\alpha)$,

$$\begin{aligned}
&\mathbb{E}[\Delta\mathbf{1}_{\{\xi_{t+1}\in U(\mathbf{x})\}} \mid \xi_t = \mathbf{x}] \\
&\geq \frac{1}{2}\mathbb{E}[f_w(\xi_{t+1}) - f_w(\xi_t) \mid \xi_t = \mathbf{x}] + C(1 + \|\mathbf{x}\|)^{1-w}\mathbb{E}[(f_w(\xi_{t+1}) - f_w(\xi_t))^2 \mid \xi_t = \mathbf{x}].
\end{aligned}$$

By (5.10), we obtain from (3.12) and (3.13) that there exists $C > 0$, not depending on K, such that, for all $\mathbf{x} \in \mathcal{W}(\alpha)$ with $\|\mathbf{x}\|$ large enough,

$$\mathbb{E}[\Delta \mathbf{1}_{\{\xi_{t+1} \in U(\mathbf{x})\}} \mid \xi_t = \mathbf{x}] \geq C\|\mathbf{x}\|^{w-1}. \tag{5.13}$$

It follows from Lemma 3.6 that we can replace Δ by $\hat{\Delta}$ in (5.13). Then the claimed result follows from (5.11) with (5.13), by taking K large enough. □

Here then is our result on the mean increment of $\hat{f}_w(\xi_t)^\gamma$ for $\gamma > 1$.

Lemma 5.4 *Suppose that (A2) holds. Suppose that for some $\sigma^2 \in (0, \infty)$, as $\|\mathbf{x}\| \to \infty$, (2.4) holds. Let $\alpha \in (0, \pi]$. Then for $w = \pi/(2\alpha)$ and any $\gamma > 1$, there exists $A \in (0, \infty)$ for which, for all $\mathbf{x} \in \mathcal{W}_A(\alpha)$,*

$$\mathbb{E}[\hat{f}_w(\xi_{t+1})^\gamma - \hat{f}_w(\xi_t)^\gamma \mid \xi_t = \mathbf{x}] \geq 0. \tag{5.14}$$

Proof. It suffices to take $\gamma \in (1, 2]$. Under the conditions of the lemma, Lemma 5.3 implies that for some K the desired result holds for $\mathbf{x} \in \mathcal{W}_A(\alpha) \setminus \mathcal{W}^K(\alpha)$. So it remains to consider $\mathbf{x} \in \mathcal{W}_A(\alpha) \cap \mathcal{W}^K(\alpha)$. Writing $\hat{\Delta} = \hat{f}_w(\xi_{t+1}) - \hat{f}_w(\xi_t)$, we have that for $\xi_t = \mathbf{x}$,

$$\hat{f}_w(\xi_{t+1})^\gamma - \hat{f}_w(\xi_t)^\gamma = (\hat{f}_w(\mathbf{x}) + \hat{\Delta})^\gamma - \hat{f}_w(\mathbf{x})^\gamma = f_w(\mathbf{x})^\gamma \left[\left(1 + \frac{\hat{\Delta}}{\hat{f}_w(\mathbf{x})} \right)^\gamma - 1 \right]. \tag{5.15}$$

To obtain a lower bound, we make use of the fact that for any $\gamma \in (1, 2]$ and $L \in (0, \infty)$,

$$(1 + x)^\gamma \geq 1 + \gamma x + \frac{1}{2}(1 + L)^{\gamma - 2}\gamma(\gamma - 1)x^2 \tag{5.16}$$

for $x \in [-1, L]$. To apply (5.16) in (5.15) with $x = \hat{\Delta}/\hat{f}_w(\mathbf{x})$ we need $-\hat{f}_w(\mathbf{x}) \leq \hat{\Delta} \leq L\hat{f}_w(\mathbf{x})$. The first inequality here is automatically satisfied since $\hat{f}_w(\xi_{t+1}) \geq 0$ a.s.. For the second inequality, we have for $\mathbf{x} \in \mathcal{W}^K(\alpha)$ from (3.11) and (5.9) that on $\{\xi_t = \mathbf{x}\}$,

$$\|\hat{\Delta}\| \leq C\|\mathbf{x}\|^{w-1} \leq CKf_w(\mathbf{x}) = CK\hat{f}_w(\mathbf{x}).$$

So taking $L = CK$ we can indeed apply (5.16) in (5.15) to obtain, for some $A, C \in (0, \infty)$, for any $\mathbf{x} \in \mathcal{W}_A(\alpha) \cap \mathcal{W}^K(\alpha)$, conditional on $\xi_t = \mathbf{x}$,

$$\hat{f}_w(\xi_{t+1})^\gamma - \hat{f}_w(\xi_t)^\gamma \geq \gamma f_w(\mathbf{x})^{\gamma-1}\hat{\Delta} + Cf_w(\mathbf{x})^{\gamma-2}\hat{\Delta}^2.$$

The right-hand side of the last display is increasing in $\hat{\Delta}$, and so by Lemma 3.6 we can replace $\hat{\Delta}$ by Δ and then take expectations to obtain

$$\begin{aligned}\mathbb{E}[\hat{f}_w(\xi_{t+1})^\gamma - \hat{f}_w(\xi_t)^\gamma \mid \xi_t = \mathbf{x}] \geq{}& \gamma f_w(\mathbf{x})^{\gamma-1}\mathbb{E}[f_w(\xi_{t+1}) - f_w(\xi_t) \mid \xi_t = \mathbf{x}] \\ &+ Cf_w(\mathbf{x})^{\gamma-2}\mathbb{E}[(f_w(\xi_{t+1}) - f_w(\xi_t))^2 \mid \xi_t = \mathbf{x}],\end{aligned}$$

for some $C > 0$ and any $\mathbf{x} \in \mathcal{W}_A(\alpha) \cap \mathcal{W}^K(\alpha)$. Now from Lemma 3.3 and the conditions on $\mu(\mathbf{x})$ and $\mathbf{M}(\mathbf{x})$ it follows that, for some $C > 0$, as $\|\mathbf{x}\| \to \infty$,

$$\mathbb{E}[\hat{f}_w(\xi_{t+1})^\gamma - \hat{f}_w(\xi_t)^\gamma \mid \xi_t = \mathbf{x}] \geq f_w(\mathbf{x})^{\gamma-1}\left[Cf_w(\mathbf{x})^{-1}r^{2w-2} + o(r^{w-2})\right],$$

for any $\mathbf{x} \in \mathcal{W}_A(\alpha) \cap \mathcal{W}^K(\alpha)$. Then the result follows since $f_w(\mathbf{x})^{-1} \geq r^{-w}$. □

5.5 Key estimate

Now we state our key lemma for this section. As mentioned above, the idea is analogous to that used (in a simpler setting) for Lemma 6.2 in [2].

Lemma 5.5 *Suppose that (A1) and (A2) hold, and that for some $\sigma^2 \in (0,\infty)$, (2.4) holds. Let $\alpha \in (0,\pi]$ and $w = \pi/(2\alpha)$. There exist $A \in (0,\infty)$ and $\varepsilon_1, \varepsilon_2 > 0$ such that for all $\mathbf{x} \in \mathcal{W}(\alpha)$ with $\|\mathbf{x}\| > A$,*

$$\mathbb{P}[\tau_{\alpha,A} > \varepsilon_1 \|\mathbf{x}\|^2 \mid \xi_0 = \mathbf{x}] \geq \varepsilon_2 \cos(w\varphi).$$

Our proof makes repeated use of the processes $(Y_t(\mathbf{x}))_{t\in\mathbb{Z}^+}$ defined for $\mathbf{x} \in \mathbb{Z}^2$ by

$$Y_t(\mathbf{x}) := \|\xi_t - \mathbf{x}\|. \tag{5.17}$$

First note that the triangle inequality implies that $|Y_{t+1}(\mathbf{x}) - Y_t(\mathbf{x})| \leq \|\xi_{t+1} - \xi_t\| \leq b$, a.s., by (A2). The next lemma gives more information about the increments of $Y_t(\mathbf{x})$. For notational ease, for $\mathbf{x} \in \mathbb{Z}^2$ and $C \in (1,\infty)$ write

$$S(\mathbf{x}; C) := \{\mathbf{y} \in \mathbb{Z}^2 : C^{-1}\|\mathbf{x}\| \leq \|\mathbf{y}\| \leq C\|\mathbf{x}\|\};\ U(\mathbf{x}; C) := \{\mathbf{y} \in \mathbb{Z}^2 : \|\mathbf{y} - \mathbf{x}\| \geq C^{-1}\|\mathbf{x}\|\}.$$

Lemma 5.6 *Suppose that (A1) and (A2) hold, and that for some $\sigma^2 \in (0,\infty)$, (2.4) holds. Then for any $\mathbf{x} \in \mathbb{Z}^2$ and any $C \in (1,\infty)$, as $\|\mathbf{x}\| \to \infty$,*

$$\sup_{\mathbf{y}\in S(\mathbf{x};C)} \left|\mathbb{E}[Y_{t+1}(\mathbf{x})^2 - Y_t(\mathbf{x})^2 \mid \xi_t = \mathbf{y}] - 2\sigma^2\right| = o(1), \tag{5.18}$$

$$\sup_{\mathbf{y}\in S(\mathbf{x};C)\cap U(\mathbf{x};C)} \left|\mathbb{E}[Y_{t+1}(\mathbf{x}) - Y_t(\mathbf{x}) \mid \xi_t = \mathbf{y}] - \frac{1}{2}\sigma^2\|\mathbf{y} - \mathbf{x}\|^{-1}\right| = o(\|\mathbf{x}\|^{-1}), \tag{5.19}$$

$$\sup_{\mathbf{y}\in S(\mathbf{x};C)\cap U(\mathbf{x};C)} \left|\mathbb{E}[(Y_{t+1}(\mathbf{x}) - Y_t(\mathbf{x}))^2 \mid \xi_t = \mathbf{y}] - \sigma^2\right| = o(1). \tag{5.20}$$

Proof. Conditional on $\xi_t = \mathbf{y} \in \mathbb{Z}^2$ we have that

$$\mathcal{L}(Y_{t+1}(\mathbf{x}) \mid \xi_t = \mathbf{y}) = \mathcal{L}((\|\mathbf{y} - \mathbf{x}\|^2 + \|\theta(\mathbf{y})\|^2 + 2(\mathbf{y} - \mathbf{x}) \cdot \theta(\mathbf{y}))^{1/2}). \tag{5.21}$$

Then (5.21) with (2.4) yields

$$\begin{aligned}\mathbb{E}[Y_{t+1}(\mathbf{x})^2 - Y_t(\mathbf{x})^2 \mid \xi_t = \mathbf{y}] &= \mathbb{E}[\|\theta(\mathbf{y})\|^2] + 2\mathbb{E}[(\mathbf{y} - \mathbf{x}) \cdot \theta(\mathbf{y})] \\ &= 2\sigma^2 + o(1) + o(\|\mathbf{y} - \mathbf{x}\|\|\mathbf{y}\|^{-1}) = 2\sigma^2 + o(1),\end{aligned}$$

for all $\mathbf{y}$ with $C^{-1}\|\mathbf{x}\| \leq \|\mathbf{y}\| \leq C\|\mathbf{x}\|$. This proves (5.18). Similarly, by (5.21),

$$\mathbb{E}[Y_{t+1}(\mathbf{x}) - Y_t(\mathbf{x}) \mid \xi_t = \mathbf{y}] = Y_t(\mathbf{x})\mathbb{E}\left[\left(1 + \frac{\|\theta(\mathbf{y})\|^2 + 2(\mathbf{y} - \mathbf{x}) \cdot \theta(\mathbf{y})}{\|\mathbf{y} - \mathbf{x}\|^2}\right)^{1/2} - 1\right]. \tag{5.22}$$

Taylor's theorem applied to the term in square brackets on the right of (5.22) yields

$$\frac{1}{2}\frac{\|\theta(\mathbf{y})\|^2 + 2(\mathbf{y} - \mathbf{x}) \cdot \theta(\mathbf{y})}{\|\mathbf{y} - \mathbf{x}\|^2} - \frac{1}{8}\frac{4((\mathbf{y} - \mathbf{x}) \cdot \theta(\mathbf{y}))^2}{\|\mathbf{y} - \mathbf{x}\|^4} + O(\|\mathbf{x}\|^{-3}),$$

using (A2), provided that $C^{-1}\|\mathbf{x}\| \le \|\mathbf{y}-\mathbf{x}\|$ and $C^{-1}\|\mathbf{x}\| \le \|\mathbf{y}\| \le C\|\mathbf{x}\|$. Taking expectations of this last expression and using (2.4), we obtain

$$\frac{1}{2}\|\mathbf{y}-\mathbf{x}\|^{-2}(2\sigma^2+o(1)) - \frac{1}{2}\|\mathbf{y}-\mathbf{x}\|^{-2}(\sigma^2+o(1)),$$

which with (5.22) gives (5.19). Finally observe that given $\xi_t = \mathbf{y}$,

$$(Y_{t+1}(\mathbf{x}) - Y_t(\mathbf{x}))^2 = (Y_{t+1}(\mathbf{x})^2 - Y_t(\mathbf{x})^2) - 2\|\mathbf{y}-\mathbf{x}\|(Y_{t+1}(\mathbf{x}) - Y_t(\mathbf{x})).$$

So from (5.19) and (5.18) we obtain (5.20). This completes the proof. □

Proof of Lemma 5.5. Suppose that $\xi_0 = \mathbf{x} \in \mathcal{W}(\alpha)$. Fix $\alpha' \in (0,\alpha)$, which we will take close to α. First suppose that $\mathbf{x} \in \mathcal{W}(\alpha')$, so that the walk does not start too close to the boundary of the wedge $\mathcal{W}(\alpha)$. Note that the shortest distance from $\mathbf{x} \in \mathcal{W}(\alpha)$ to the wedge boundary $\partial\mathcal{W}(\alpha)$ is at least $\|\mathbf{x}\|\sin(\alpha - |\varphi|)$, and that for all $\mathbf{x} \in \mathcal{W}(\alpha')$, $\varphi \in (-\alpha', \alpha')$ so this distance is at least $\varepsilon_0\|\mathbf{x}\|$, where $\varepsilon_0 := \sin(\alpha - \alpha') > 0$.

Suppose that $\mathbf{y} \in B_{\varepsilon_0\|\mathbf{x}\|/2}(\mathbf{x}) \subset \mathcal{W}(\alpha)$. Note that for $\mathbf{y} \in B_{\varepsilon_0\|\mathbf{x}\|/2}(\mathbf{x})$ we have

$$\|\mathbf{y}-\mathbf{x}\| \le (\varepsilon_0/2)\|\mathbf{x}\|, \quad \|\mathbf{y}\| \le (1+(\varepsilon_0/2))\|\mathbf{x}\|, \quad \text{and} \quad \|\mathbf{y}\| \ge (1-(\varepsilon_0/2))\|\mathbf{x}\|. \tag{5.23}$$

It then follows from (5.18) and (5.23) that for $\mathbf{y} \in B_{\varepsilon_0\|\mathbf{x}\|/2}(\mathbf{x})$,

$$\mathbb{E}[Y_{t+1}(\mathbf{x})^2 - Y_t(\mathbf{x})^2 \mid \xi_t = \mathbf{y}] = 2\sigma^2 + o(1), \tag{5.24}$$

as $\|\mathbf{x}\| \to \infty$. For the rest of this proof, let $\kappa = \min\{t \in \mathbb{Z}^+ : \|\xi_t - \mathbf{x}\| \ge \varepsilon_0\|\mathbf{x}\|/2\}$, the first exit time of Ξ from $B_{\varepsilon_0\|\mathbf{x}\|/2}(\mathbf{x})$. It follows from (5.24) that for all $\mathbf{x} \in \mathcal{W}(\alpha')$ with $\|\mathbf{x}\|$ large enough, $Y_{t\wedge\kappa}(\mathbf{x})^2$ is a nonnegative submartingale with respect to the natural filtration for Ξ, and there exists $C \in (0,\infty)$ such that for all $\mathbf{x} \in \mathcal{W}(\alpha')$ with $\|\mathbf{x}\|$ sufficiently large and for all $t \in \mathbb{Z}^+$, $\mathbb{E}[Y_{t\wedge\kappa}(\mathbf{x})^2 \mid \xi_0 = \mathbf{x}] \le Ct \wedge \kappa \le Ct$.

Then Doob's submartingale inequality implies that there exists $C \in (0,\infty)$ such that for any $\mathbf{x} \in \mathcal{W}(\alpha')$ with $\|\mathbf{x}\|$ sufficiently large, any $t \in \mathbb{Z}^+$, and any $x > 0$,

$$\mathbb{P}\left[\max_{0\le s\le t} Y_{s\wedge\kappa}(\mathbf{x})^2 \ge x \;\middle|\; \xi_0 = \mathbf{x}\right] \le Ct/x.$$

So in time $t = x/(2C)$, there is probability at least $1/2$ that $\max_{0\le s\le t} Y_{s\wedge\kappa}(\mathbf{x}) \le x^{1/2}$. Noting that $Y_\kappa(\mathbf{x}) \ge \varepsilon_0\|\mathbf{x}\|/2$ a.s., and taking $x = \varepsilon_0^2\|\mathbf{x}\|^2/9$, we conclude that

$$\mathbb{P}\left[\max_{0\le s\le \varepsilon_0^2\|\mathbf{x}\|^2/(18C)} \|\xi_s - \mathbf{x}\| \le \varepsilon_0\|\mathbf{x}\|/3 \;\middle|\; \xi_0 = \mathbf{x}\right] \ge 1/2.$$

The event in the last displayed probability implies that Ξ remains in $B_{\varepsilon_0\|\mathbf{x}\|/2}(\mathbf{x}) \subset \mathcal{W}(\alpha)$ till time $\varepsilon_0^2\|\mathbf{x}\|^2/(18C)$. So, for any $\mathbf{x} \in \mathcal{W}(\alpha')$ with $\|\mathbf{x}\|$ sufficiently large,

$$\mathbb{P}\left[\tau_{\alpha,A} \ge \frac{\varepsilon_0^2}{18C}\|\mathbf{x}\|^2 \;\middle|\; \xi_0 = \mathbf{x}\right] \ge 1/2. \tag{5.25}$$

This yields the statement in the lemma for $\mathbf{x} \in \mathcal{W}(\alpha')$, for any $\alpha' \in (0,\alpha)$.

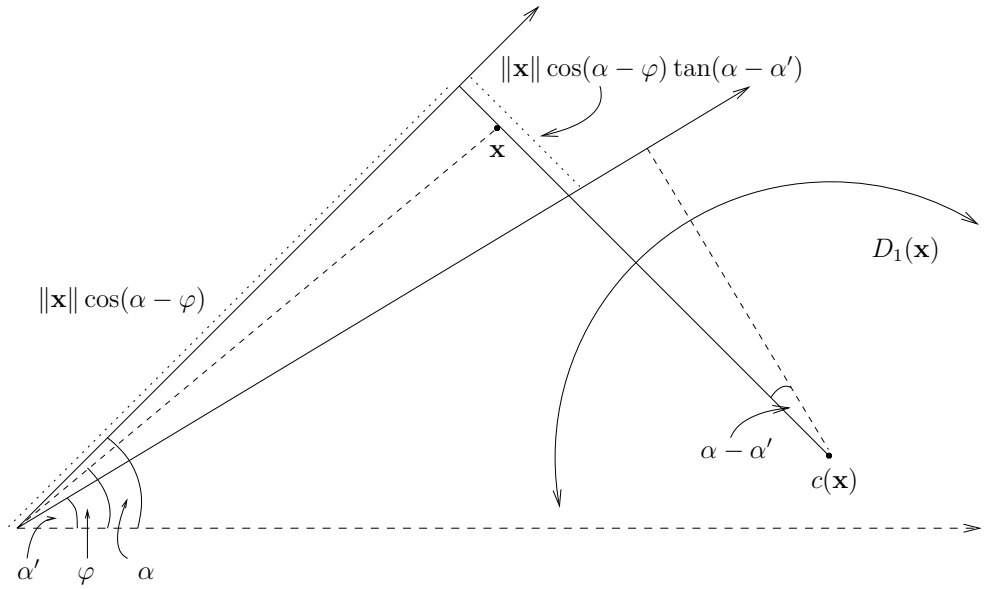

Figure 2: The geometrical construction of $c(\mathbf{x})$ and $D_1(\mathbf{x})$.

Now we need to deal with the case $\mathbf{x} \in \mathcal{W}(\alpha) \setminus \mathcal{W}(\alpha')$. We take $\alpha' < \alpha$ but close to α, so that $\varepsilon_0 = \sin(\alpha - \alpha')$ is small. Suppose that $\mathbf{x} \in \mathcal{W}(\alpha) \setminus \mathcal{W}(\alpha')$, and, without loss of generality, that $\varphi > 0$; then $\varphi \in [\alpha', \alpha)$. Set

$$R := R(\alpha; \mathbf{x}) := \begin{cases} 1 & \text{if } \alpha \geq \pi/2 \\ 1 \wedge [(\tan\alpha)(\cos(\alpha-\varphi))] & \text{if } \alpha \in (0, \pi/2) \end{cases},$$

and then define $c(\mathbf{x}) := \mathbf{e}_r(\alpha)\|\mathbf{x}\|\cos(\alpha-\varphi) - R(\alpha;\mathbf{x})\mathbf{e}_\perp(\alpha)\|\mathbf{x}\|$.

When $R < 1$, this means that $c(\mathbf{x}) = \mathbf{e}_1\|\mathbf{x}\|\cos(\alpha-\varphi)\sec\alpha$ lies on the principal axis of the wedge. See Figure 2 for a typical picture for $R = 1$. Note that

$$\|c(\mathbf{x})\| = \|\mathbf{x}\|\left(R^2 + \cos^2(\alpha-\varphi)\right)^{1/2}, \tag{5.26}$$

and also $\mathbf{x} - c(\mathbf{x}) = (R - \sin(\alpha-\varphi))\|\mathbf{x}\|\mathbf{e}_\perp(\alpha)$, so that

$$\|\mathbf{x} - c(\mathbf{x})\| = (R - \sin(\alpha-\varphi))\|\mathbf{x}\| \geq \varepsilon_1\|\mathbf{x}\|, \tag{5.27}$$

for some $\varepsilon_1 > 0$ and all $\mathbf{x} \in \mathcal{W}(\alpha) \setminus \mathcal{W}(\alpha')$ provided that α' is close enough to α. Also from (5.26) we have that for some $\varepsilon_2 > 0$ and all $\mathbf{x} \in \mathcal{W}(\alpha) \setminus \mathcal{W}(\alpha')$,

$$\varepsilon_2\|\mathbf{x}\| \leq \|c(\mathbf{x})\| \leq \sqrt{2}\|\mathbf{x}\|. \tag{5.28}$$

Consider the concentric disks $D_1(\mathbf{x}) := B_{R\|\mathbf{x}\|/2}(c(\mathbf{x}))$ and $D_2(\mathbf{x}) := B_{R\|\mathbf{x}\|}(c(\mathbf{x}))$.

If $R = 1$, the shortest distance of $c(\mathbf{x})$ from the ray from $\mathbf{0}$ in the $\mathbf{e}_r(\alpha')$ direction is

$$\|\mathbf{x}\|\cos(\alpha-\alpha') - \|\mathbf{x}\|\sin(\alpha-\alpha')\cos(\alpha-\varphi) \geq (1-\varepsilon_0)\|\mathbf{x}\|\cos(\alpha-\alpha'),$$

for all $\mathbf{x} \in \mathcal{W}(\alpha) \setminus \mathcal{W}(\alpha')$. If $R < 1$, the corresponding distance is $\|\mathbf{x}\| \cos(\alpha - \varphi) \sec \alpha \sin \alpha'$. In either case, choosing α' close enough to α, it follows that $D_1(\mathbf{x}) \subset \mathcal{W}(\alpha')$ for all $\mathbf{x} \in \mathcal{W}(\alpha) \setminus \mathcal{W}(\alpha')$. Moreover, for ε_0 small enough, for any $\mathbf{y} \in D_2(\mathbf{x})$, by (5.26),

$$\|\mathbf{y}\| \geq \|c(\mathbf{x})\| - R\|\mathbf{x}\| \geq \left((R^2 + 1 - \varepsilon_0^2)^{1/2} - R\right) \|\mathbf{x}\| \geq \varepsilon_0 \|\mathbf{x}\|. \tag{5.29}$$

We now aim to show that there exists $\varepsilon' > 0$ such that for all $\mathbf{x} \in \mathcal{W}(\alpha) \setminus \mathcal{W}(\alpha')$ with $\|\mathbf{x}\|$ sufficiently large,

$$p(\mathbf{x}) := \mathbb{P}\left[\Xi \text{ visits } D_1(\mathbf{x}) \text{ before } \mathbb{R}^2 \setminus D_2(\mathbf{x}) \mid \xi_0 = \mathbf{x}\right] \geq \varepsilon' \cos(w\varphi). \tag{5.30}$$

From the geometrical argument leading up to (5.29), and the jumps bound (A2), it follows that if the event in (5.30) occurs, Ξ visits a region of $\mathcal{W}(\alpha')$ at distance at least $\varepsilon_0\|\mathbf{x}\|$ from $\mathbf{0}$ before leaving $\mathcal{W}(\alpha)$. Hence given (5.30), (5.25) yields the statement in the lemma in this case also.

Thus it remains to prove (5.30). With the notation defined at (5.17), we now consider $Y_t(c(\mathbf{x})) = \|\xi_t - c(\mathbf{x})\|$ for ξ_t in the annulus $D_2(\mathbf{x}) \setminus D_1(\mathbf{x})$. For any $\mathbf{y} \in D_2(\mathbf{x}) \setminus D_1(\mathbf{x})$ we have $R\|\mathbf{x}\|/2 \leq \|\mathbf{y} - c(\mathbf{x})\| \leq R\|\mathbf{x}\|$, so that $\|\mathbf{y}\| \leq \|\mathbf{x}\| + \|c(\mathbf{x})\|$. This together with (5.28) and (5.29) implies that for α' close enough to α there exist $C_1, C_2 \in (0, \infty)$ such that for any $\mathbf{x} \in \mathcal{W}(\alpha) \setminus \mathcal{W}(\alpha')$ and any $\mathbf{y} \in D_2(\mathbf{x}) \setminus D_1(\mathbf{x})$,

$$C_1\|\mathbf{x}\| \geq \|\mathbf{y}\| \geq C_2\|\mathbf{x}\|, \text{ and } \|\mathbf{y} - c(\mathbf{x})\| \geq C_2\|\mathbf{x}\|. \tag{5.31}$$

Hence by (5.31) and (5.28), the estimates (5.19) and (5.20) are valid for $Y_t(c(\mathbf{x}))$ and $\mathbf{y} \in D_2(\mathbf{x}) \setminus D_1(\mathbf{x})$, as $\|\mathbf{x}\| \to \infty$. Thus we have that there exists $\delta > 0$ such that for $\mathbf{x} \in \mathcal{W}(\alpha) \setminus \mathcal{W}(\alpha')$ with $\|\mathbf{x}\|$ large enough and all $\mathbf{y} \in D_2(\mathbf{x}) \setminus D_1(\mathbf{x})$,

$$\mathbb{E}[Y_{t+1}(c(\mathbf{x})) - Y_t(c(\mathbf{x})) \mid \xi_t = \mathbf{y}] = O(\|\mathbf{x}\|^{-1}), \tag{5.32}$$

$$\mathbb{E}[(Y_{t+1}(c(\mathbf{x})) - Y_t(c(\mathbf{x})))^2 \mid \xi_t = \mathbf{y}] > \delta > 0. \tag{5.33}$$

For $C \in (0, \infty)$ consider now the process $(Z_t)_{t \in \mathbb{Z}^+}$ defined for $t \in \mathbb{Z}^+$ by

$$Z_t := \exp\left\{C\left(R(\alpha; \mathbf{x}) - \frac{Y_t(c(\mathbf{x}))}{\|\mathbf{x}\|}\right)\right\};$$

then by (5.27), $Z_0 = \exp\{C \sin(\alpha - \varphi)\}$. Then we have for $t \in \mathbb{Z}^+$ and $\mathbf{y} \in \mathbb{Z}^2$,

$$\begin{aligned}
&\mathbb{E}[Z_{t+1} - Z_t \mid \xi_t = \mathbf{y}] \\
&= \exp\left\{C\left(R - \frac{\|\mathbf{y} - c(\mathbf{x})\|}{\|\mathbf{x}\|}\right)\right\} \mathbb{E}\left[\exp\left\{-\frac{C}{\|\mathbf{x}\|}(Y_{t+1}(c(\mathbf{x})) - Y_t(c(\mathbf{x})))\right\} - 1 \;\middle|\; \xi_t = \mathbf{y}\right].
\end{aligned}$$

Since there exist positive constants C_1, C_2 such that $\mathrm{e}^{-x} - 1 \geq -x + C_1 x^2$ for all x with $|x| < C_2$, using the fact that $Y_t(c(\mathbf{x}))$ has uniformly bounded increments we obtain that for any $\mathbf{x} \in \mathcal{W}(\alpha) \setminus \mathcal{W}(\alpha')$ and any $\mathbf{y} \in D_2(\mathbf{x}) \setminus D_1(\mathbf{x})$,

$$\mathbb{E}\left[\exp\left\{-\frac{C}{\|\mathbf{x}\|}(Y_{t+1}(c(\mathbf{x})) - Y_t(c(\mathbf{x})))\right\} - 1 \;\middle|\; \xi_t = \mathbf{y}\right]$$

$$\geq \frac{C}{\|\mathbf{x}\|}\mathbb{E}\left[-(Y_{t+1}(c(\mathbf{x})) - Y_t(c(\mathbf{x}))) + C_1\frac{C}{\|\mathbf{x}\|}(Y_{t+1}(c(\mathbf{x})) - Y_t(c(\mathbf{x})))^2 \;\middle|\; \xi_t = \mathbf{y}\right].$$

So by (5.32), (5.33) we may take C large enough such that for $\xi_0 = \mathbf{x} \in \mathcal{W}(\alpha) \setminus \mathcal{W}(\alpha')$,

$$\mathbb{E}[Z_{t+1} - Z_t \mid \xi_t = \mathbf{y}] \geq 0, \tag{5.34}$$

for all $\mathbf{y} \in D_2(\mathbf{x}) \setminus D_1(\mathbf{x})$ with $\|\mathbf{x}\|$ large enough, and all $t \in \mathbb{Z}^+$.

Now to estimate $p(\mathbf{x})$ as in (5.30), we make the sets $D_1(\mathbf{x})$ and $\mathbb{R}^2 \setminus D_2(\mathbf{x})$ absorbing. Then (using (A2)) Z_t is bounded for this modified random walk, and (using (A1)) Ξ leaves $D_2(\mathbf{x}) \setminus D_1(\mathbf{x})$ in almost surely finite time. Thus as $t \to \infty$, Z_t converges almost surely and in L^1 to some limit Z_∞ and

$$\mathbb{E}[Z_\infty \mid \xi_0 = \mathbf{x}] \leq p(\mathbf{x})\exp\{CR/2\} + (1 - p(\mathbf{x})),$$

while by (5.34) we also have that $\mathbb{E}[Z_\infty \mid \xi_0 = \mathbf{x}] \geq \mathbb{E}[Z_0] = \exp\{C\sin(\alpha - \varphi)\}$. Hence there exists $C \in (0, \infty)$ such that for all $\mathbf{x} \in \mathcal{W}(\alpha) \setminus \mathcal{W}(\alpha')$ with $\|\mathbf{x}\|$ large enough

$$p(\mathbf{x}) \geq \frac{\exp\{C\sin(\alpha - \varphi)\} - 1}{\exp\{CR/2\} - 1} \geq \frac{C}{\mathrm{e}^{CR/2} - 1}\sin(\alpha - \varphi).$$

Now for $\mathbf{x} \in \mathcal{W}(\alpha) \setminus \mathcal{W}(\alpha')$ we have that $\alpha - \varphi < \alpha - \alpha'$, where $\alpha - \alpha'$ is small. Since, for $a > 0$, $\frac{\sin(ax)}{\sin(x)} \to a$ as $x \to 0$, it follows that there exists some $\varepsilon' > 0$ such that

$$\frac{C}{\mathrm{e}^{CR/2} - 1}\sin(\alpha - \varphi) \geq \varepsilon'\sin(w(\alpha - \varphi)) = \varepsilon'\cos(w\varphi).$$

This proves (5.30), and so the proof of the lemma is complete. □

5.6 Proof of Theorem 2.4(ii)

Now we are ready to complete the proof of Theorem 2.4(ii).

Proof of Theorem 2.4(ii). Let $\alpha \in (0, \pi]$ and $w = \pi/(2\alpha)$. We first show that for A sufficiently large, any $\varepsilon > 0$, and any $\mathbf{x} \in \mathcal{W}_A(\alpha)$, $\mathbb{E}[\tau_\alpha^{(w/2)+\varepsilon} \mid \xi_0 = \mathbf{x}] = \infty$. We proceed in a similar way to the proof of Theorem 6.1 in [2].

Let $A \in (0, \infty)$, to be fixed later. For the duration of this proof, to ease notation, set $\tau := \tau_{\alpha,A}$. Let $\mathbf{x} \in \mathcal{W}_A(\alpha)$ be such that $f_w(\mathbf{x}) > A^w$. Suppose, for the purpose of deriving a contradiction, that for some $\varepsilon > 0$, $\mathbb{E}[\tau^{(w/2)+\varepsilon} \mid \xi_0 = \mathbf{x}] < \infty$. Let $\Xi' = (\xi'_t)_{t\in\mathbb{Z}^+}$ be an independent copy of Ξ, and let τ' be the corresponding independent copy of τ. Then for any $t \in \mathbb{N}$, by conditioning on ξ_t and using the Markov property at time τ,

$$\mathbb{E}[\tau^{(w/2)+\varepsilon} \mid \xi_0 = \mathbf{x}] \geq \mathbb{E}\left[\mathbb{E}\left[(t + \tau')^{(w/2)+\varepsilon} \mid \xi'_0 = \xi_t\right]\mathbf{1}_{\{\tau > t\}} \mid \xi_0 = \mathbf{x}\right].$$

Hence by Lemma 5.5, for A large enough,

$$\mathbb{E}[\tau^{(w/2)+\varepsilon} \mid \xi_0 = \mathbf{x}] \geq \varepsilon_2\mathbb{E}[(t + \varepsilon_1\|\xi_t\|^2)^{(w/2)+\varepsilon}\cos(w\varphi(\xi_t))\mathbf{1}_{\{\tau > t\}} \mid \xi_0 = \mathbf{x}]$$

$$\geq C\mathbb{E}\left[(\hat{f}_w(\xi_{t\wedge\tau}))^{1+(2/w)\varepsilon} \mid \xi_0 = \mathbf{x}\right] - A^{w+2\varepsilon},$$

for some $C \in (0,1)$, any $t \in \mathbb{N}$, using the fact that $\hat{f}_w(\xi_\tau) \leq A^w$ a.s.. Thus under the hypothesis $\mathbb{E}[\tau^{(w/2)+\varepsilon} \mid \xi_0 = \mathbf{x}] < \infty$, for some $\varepsilon' > 0$ the process $(\hat{f}_w(\xi_{t\wedge\tau}))^{1+\varepsilon'}$ is uniformly integrable. It follows (since by hypothesis $\tau < \infty$ a.s.) that as $t \to \infty$, $\mathbb{E}[(\hat{f}_w(\xi_{t\wedge\tau}))^{1+\varepsilon'} \mid \xi_0 = \mathbf{x}] \to \mathbb{E}[(\hat{f}_w(\xi_\tau))^{1+\varepsilon'} \mid \xi_0 = \mathbf{x}] \leq A^{w(1+\varepsilon')}$. However, by the submartingale property (5.14), for A large enough, $\mathbb{E}[(\hat{f}_w(\xi_{t\wedge\tau}))^{1+\varepsilon'} \mid \xi_0 = \mathbf{x}] \geq (\hat{f}_w(\mathbf{x}))^{1+\varepsilon'} > A^{w(1+\varepsilon')}$ for all $t \in \mathbb{N}$, given our condition on $\mathbf{x}$. Thus we have the desired contradiction, and $\mathbb{E}[\tau^{(w/2)+\varepsilon} \mid \xi_0 = \mathbf{x}] = \infty$ for any $\mathbf{x} \in \mathcal{W}_A(\alpha)$ with $f_w(\mathbf{x}) > A^w$. Since $\tau_\alpha \geq \tau$ a.s., this implies that $\mathbb{E}[\tau_\alpha^{(w/2)+\varepsilon} \mid \xi_0 = \mathbf{x}] = \infty$ for any $\mathbf{x} \in \mathcal{W}_A(\alpha)$ with $f_w(\mathbf{x}) > A^w$. Lemma 4.9 extends the conclusion to any $\mathbf{x} \in \mathcal{W}(\alpha)$ with $\|\mathbf{x}\|$ large enough. $\square$

Acknowledgements

Some of this work was done while AW was at the University of Bristol, supported by the Heilbronn Institute for Mathematical Research.

References

[1] S. Aspandiiarov, R. Iasnogorodski, and M. Menshikov, Passage-time moments for non-negative stochastic processes and an application to reflected random walks in a quadrant, *Ann. Probab.* **24** (1996) 932–960.

[2] V. Belitsky, P.A. Ferrari, M.V. Menshikov, and S.Yu. Popov, A mixture of the exclusion process and the voter model, *Bernoulli* **7** (2001) 119–144.

[3] D.L. Burkholder, Exit times of Brownian motion, harmonic majorization, and Hardy spaces, *Adv. Math.* **26** (1977) 182–205.

[4] J.W. Cohen, On the random walk with zero drifts in the first quadrant of $\mathbb{R}_2$, *Comm. Statist. Stochastic Models* **8** (1992) 359–374.

[5] R.D. DeBlassie, Exit times from cones in $\mathbb{R}^n$ of Brownian motion, *Probab. Theory Relat. Fields* **74** (1987) 1–29.

[6] G. Fayolle, V.A. Malyshev, and M.V. Menshikov, Topics in the Constructive Theory of Countable Markov Chains, Cambridge University Press, 1995.

[7] F.G. Foster, On the stochastic matrices associated with certain queuing processes, *Ann. Math. Statist.* **24** (1953) 355–360.

[8] J.-D. Fouks, E. Lesigne, and M. Peigné, Étude asymptotique d'une marche aléatoire centrifuge, *Ann. Inst. H. Poincaré Probab. Statist.* **42** (2006) 147–170.

[9] Y. Fukai, Hitting time of a half-line by two-dimensional random walk, *Probab. Theory Relat. Fields* **128** (2004) 323–346.

[10] R. Garbit, Temps de sortie d'une cône pour une marche aléatoire centrée, *C. R. Math. Acad. Sci. Paris* **345** (2007) 587–591.

[11] J.F.C. Kingman, The ergodic behaviour of random walks, *Biometrika* **48** (1961) 391–396.

[12] L.A. Klein Haneveld and A.O. Pittenger, Escape time for a random walk from an orthant, *Stochastic Processes Appl.* **35** (1990) 1–9.

[13] J. Lamperti, Criteria for the recurrence and transience of stochastic processes I, *J. Math. Anal. Appl.* **1** (1960) 314–330.

[14] J. Lamperti, Criteria for stochastic processes II: passage-time moments, *J. Math. Anal. Appl.* **7** (1963) 127–145.

[15] G.F. Lawler, Estimates for differences and Harnack inequality for difference operators coming from random walks with symmetric, spatially inhomogeneous, increments, *Proc. London Math. Soc.* **63** (1991) 552–568.

[16] G.F. Lawler, Intersections of Random Walks, *Probability and Its Applications*, Birkhäuser, Boston, 1996.

[17] I.M. MacPhee, M.V. Menshikov, and A.R. Wade, Angular asymptotics for multi-dimensional non-homogeneous random walks with asymptotically zero drift, *Markov Process. Relat. Fields* **16** (2010) 351–388.

[18] V.A. Malyshev, Classification of two-dimensional positive random walks and almost linear semimartingales, *Soviet Math. Dokl.* **13** (1972) 136–139; translated from *Dokl. Akad. Nauk SSSR* **202** (1972) 526–528 (in Russian).

[19] M.V. Menshikov, M. Vachkovskaia, and A.R. Wade, Asymptotic behaviour of randomly reflecting billiards in unbounded tubular domains, *J. Statist. Phys.* **132** (2008) 1097–1133.

[20] M.V. Menshikov and A.R. Wade, Rate of escape and central limit theorem for the supercritical Lamperti problem, *Stochastic Process. Appl.* **120** (2010) 2078–2099.

[21] S. Mustapha, Gaussian estimates for spatially inhomogeneous random walks on Z^d, *Ann. Probab.* **34** (2006) 264–283.

[22] F. Spitzer, Some theorems concerning 2-dimensional Brownian motion, *Trans. Amer. Math. Soc.* **87** (1958) 187–197.

[23] F. Spitzer, Principles of Random Walk, 2nd edition, Springer, New York, 1976.

[24] N.Th. Varopoulos, Potential theory in conical domains, *Math. Proc. Cambridge Philos. Soc.* **125** (1999) 335–384.

[25] N.Th. Varopoulos, Potential theory in conical domains II, *Math. Proc. Cambridge Philos. Soc.* **129** (2000) 301–319.